2023 - 2024

Sanitana

Professional Catalogue


Sanitana



Earth

N°4

2023

A year of transformations

A new year has begun and, with it, a new cycle. In the theory of the five elements, the ashes of Fire give rise to the element Earth and its promise of growth.

Just as the earth can be cultivated, we continue to invest to ensure the quality of everything we do. We build on the stability of nearly 45 years of serving you, to grow and renew the Sanitana of always.

However, just as the Earth withstands storms and adapts, we understand the importance of being able to change and evolve in response to new challenges and opportunities.

In the face of current climate change, we are more committed than ever to ensuring the sustainability of our products and production units. That is why we are investing to make our composite products factory officially carbon neutral very, very soon.

This is one of the many initiatives we are preparing in keeping with our commitment to sustainability. For you, for us and for our planet for years to come.

Thank you for joining us



Sanitaryware

Sanitaryware collections

Coral 014
Glam 018
Be You 024
N Nex 032
Pop Square 040
Pop Art 044
N Loft 050
Grecia 056
Regina 060
Munique 064
N Cent 072
Infantil 078
N Mobil 082

Add-ons

N **Assembly sets** 086
Water inlet and outlet systems 092
N Water inlet mechanisms 093
Shut-off valves 094
N Flushing mechanisms 095
Flowmeters 096
Flush plates 097
Outlet wastes 099
N Bottle traps 100
Connecting elements 102
Hygiene accessories 102
N Hand shower 102

Public spaces

Collective spaces

Urinoirs

Electronic 108
Vertical inlet 110
Horizontal inlet 112
Children's bathrooms 114

Accessibility

Sanitaryware collections

N Mobil 117
Nexo 118
WC Accessories
Mobil accessories 120
Faucets
Electronic faucets 126
Timed faucets 130
N Clinical faucets 135

Specific products

Slop hopper 136
Utility sink 136
Laundry sink 136

Washbasins

Solid surface washbasins

Countertop models

Helm 151

Wall-mounted washbasins

N Even 153
N Velvet 159
N Sleek 165

Recessed washbasins

Even 169
Velvet 173
Sleek 176

Vitreous china washbasins

Countertop washbasins

N Halo 179
Arena 180
Trik 180
Orbit 181
Elipse 181
Albus 181
Urban 184
Cup 185
Be You 185
Loft 185

Countertop / wall-mounted

Cubic 187
City 187
Albus 187
Pop Art 188

Wall-mounted washbasins

Albus 191
Albus (corner) 192
Isla 193
Shape 193
Drop 193
Be You 194
Loft 195
Mobil 196
Munique 197
N Cent 198
Grecia 199
Regina 199

Recessed washbasins

N Alur 201
Albus 201
Ovalo 202
Circle 202
Be You 202
Aida 203
Nex 204
Grecia 204
Luso 205
Anadia 205
Jara 205

Faucets

Bathroom collections

Moon 212
Sun 216
Silk 220
Balance 228
Orbis 238
Loop 242
Norm 246
Selekt 250
Prim 254
Unic 258
N Bloom 268
N Viva 276
N Scope 280
Atlas 40 284
Xs 286
Grecia 288

Technical faucets

Electronic 290
Self-closing 294
Shut-off valves 299
Specific uses 300

Add-ons

Outlet wastes 301
N Bottle traps 302

Kitchen collections

Volt 305
Stem 306
Loop 308
Prim 308
Silk 309
Unic 309
N Bloom 309
Atlas 40 310
Viva 310
Xs 311

Furniture

Furniture collections

Arden 318
Harapan 322
Stenis 326
Weza 330
Yankari 334
Tahoe 336
Willow 342
Willow Unik 348
Casual 352
N Ficus 354
N Maple 358
Pike 362

Mirrors

N Scutum 365
Polaris 365
Asterion 365
Antares 366
Mayara 366
Naos 366
Sirius 368
Heka 368
Kuma 368
Unuk 369
Vega 369

WC Accessories

N Studio 370
N Stout 382
N Twig 386
N Kin Round 392
N Kin Square 398
Mobil 404

Showertrays

Stonex® showertrays

N Rocks 418

Acrylic showertrays

N Vita 422
Julia 430
Esfera 434

Ceramic showertrays

N Calisson 436

Enamelled stell showertrays

Universal 440

Enclosures

Shower enclosures

Open 446
Evolve 454
Step Up 460

Bath enclosures

Step Up 470

Shower

Hydromassage shower columns

Edge 478
Yn Black 480
Yn 482
Flex 484

Shower columns

Swell 486
Beat 488
Acqua 490

Shower components

Shower systems 492
N Faucets 498
N Overhead showers 504
N Overhead showers connectors 506
Water cascades 507
Water jets 507
N Hand showers 508
N Shower bars 509
N Hand shower supports 509
N Shower hoses 510
Shower seats 510

Shower and sauna cabins

Eden 512

Bathtubs

Solid surface bathtubs

Aman 526

Acrylic bathtubs

Zaha 528
Patricia 530
Quattro 532
Vita 534
Raquel 538
Plaza 540
Cubic 542
Rosario 546
Carolina 548
Nex 550
Helena 554
Sara 556
Nex Angular 558
Fatima 560
Isabel 562
Margarida 564
Area 566
Claudia 568
Rute 570
Trevo 572
Oasis 574

Add-ons

Wood panels 576
Accessories 578

Enamelled steel bathtubs

Queen 580
Hotel 582
Europa 584
Europa Infantil 586

Sanitaryware 008

Public spaces 104

Washbasins 138

Faucets 206

Furniture 312

Shower trays 410

Enclosures 442

Shower 472

Bathtubs 518





Sanitaryware collections

Introduction

	Information	010
	Collection guide	012

Collections

	Coral	014
	Glam	018
	Be You	024
N	Nex	032
	Pop Square	040
	Pop Art	044
N	Loft	050
	Grecia	056
	Regina	060
	Munique	064
N	Cent	072
	Infantil	078
N	Mobil	082

Add-ons

N	Assembly sets	086
	Water inlet and outlet systems	092
N	Water inlet mechanisms	093
	Shut-off valves	094
N	Flushing mechanisms	095
	Flowmeters	096
	Flush plates	097
	Outlet wastes	099
N	Bottle traps	100
	Connecting elements	102
	Hygiene accessories	102
N	Bidet shower	102

Sanitaryware

Learn more about our offer

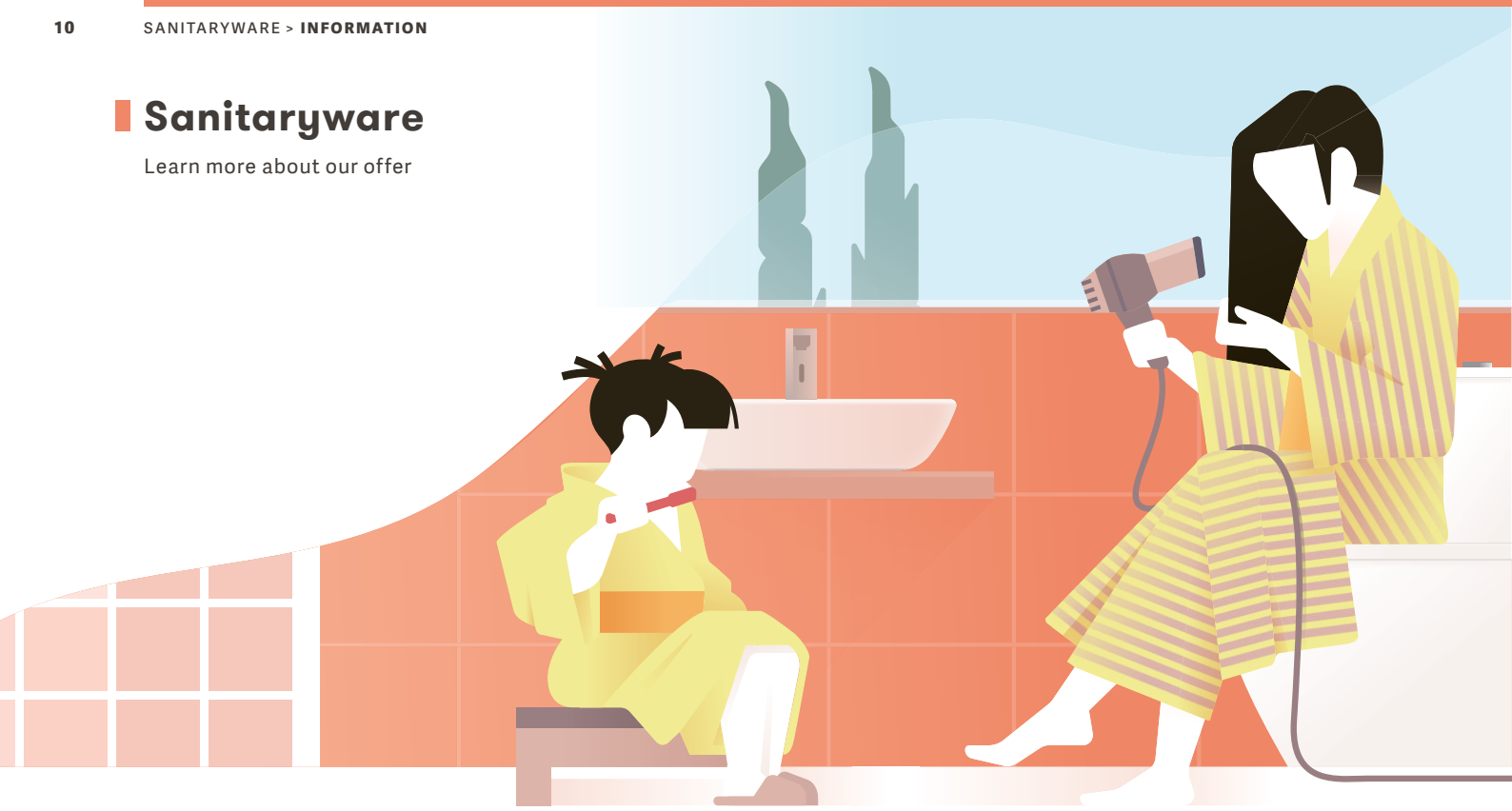

Material

Toiletry ceramic

Hygiene and durability

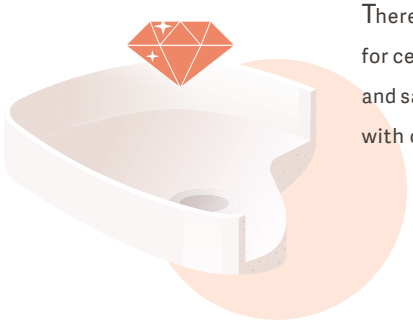

There´s a good reason why Toiletry ceramic has been used in bathrooms for centuries. Produced from natural raw materials, the comfort, hygiene and safety advantages of this material are unmistakeable. Get acquainted with our Sanitaryware to find out more.

Sustainability

Saving water

Reducing without compromising performance

If you´re looking to reduce water consumption, choosing a dual flush toilet is one of the best options to do so. Conventional toilets use up all the water in the tank - whether it is necessary or not - and are responsible for over 30% of the overall domestic water consumption. This is why most of our tanks are equipped with dual flush – 3/6 or 3/4,5 litres – which allow you to use only a part of the water in the tank, thus preventing wasting this precious resource.



3/4,5 litres dual flush available in these collections:

Coral · **Glam** · **Be You** · **Nex** ('Floor-standing close-coupled BTW toilet') · **Pop Square** · **Pop Art** · **Loft**

Technologies

Safety and comfort

Solutions to make everyday life easier

Learn more about the technology behind our toilet seats and covers, specially designed for your comfort, safety and convenience.

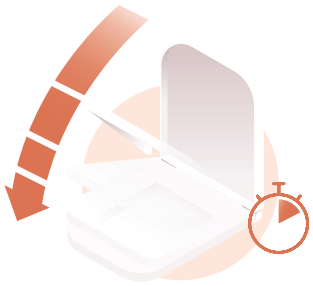

Soft-close

A gentle push is all it takes to start the motion of lowering your soft-close toilet seat cover slowly and silently. This convenient technology prevents accidents with small children (such as trapped fingers), but it also allows the cover to close without making a loud thud.

Available in these collections:
Coral · Glam · Be You · Nex
Pop Square · Pop Art · Loft
Regina · Munique · Cent · Mobil

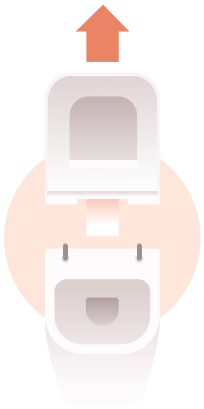

Take-off system

The ingenious take-off technology enables the easy removal of the toilet seat cover for a thorough cleaning of all surfaces of the toilet. With the push of a button it becomes possible to reach all the difficult access areas and easily reattach the toilet seat after you are done.

Available in these collections:
Coral · Glam · Nex · Pop Art
Loft · Regina · Munique
Cent · Mobil

Range

Toilets

What to consider when choosing

Types of sewage outlets

Horizontal outlet

Toilets with a horizontal outlet have a soil pipe that can only be connected horizontally with the sewage outflow pipe.

Dual outlet

This type of toilets allows the adjustment of the soil pipe so it can be connected horizontally or vertically with the sewage outflow pipe.

Vertical outlet

Toilets with a vertical outlet have a soil pipe that can only be connected vertically with the sewage outflow pipe.

Types of toilets

Floor-standing

Length

Munique	460 - 505mm

Floor-standing BTW

Length

Coral	560mm
Be You	545mm
Nex	540mm
Pop Art	540mm
Infantil	415mm

Floor-standing CC

Length

Be You	640mm
Nex	665mm
Loft	660mm
Grecia	730mm
Regina	690mm
Munique	680mm
Cent	670mm
Mobil	690mm

Floor-standing CC BTW

Length

Coral	620mm
Glam	600mm
Be You	640mm
Nex	610mm
Pop Square	600mm
Pop Art	640mm

Wall-mounted

Length

Coral	555mm
Glam	525mm
Be You	540mm
Nex	535mm
Pop Square	530mm
Pop Art	540mm
Munique	540mm

Collection guide

Discover our range of Sanitaryware collections



	Coral 5 Models	**Glam** 4 Models	**Be You** 18 Models	**Nex** 14 Models	**Pop Square** 4 Models	**Pop Art** 9 Models
	Page 014	Page 018	Page 024	Page 032	Page 040	Page 044
Toilets						
> floor-standing						
> floor-standing BTW	•		•	•		•
> floor-standing close-coupled			•	•		
> floor-standing close-coupled BTW	•	•	•	•	•	•
> wall-mounted	•	•	•	•	•	•
Toilet seats and covers						
> thermodur			•		•	
> thermodur -slim						
> thermodur (take-off system)	•	•		•		•
> thermodur - slim (take-off system)		•				
> thermodur - soft-close			•		•	
> thermodur - soft-close (take-off system)	•	•		•		•
> thermodur - soft-close - slim (take-off system)	•	•		•		
> thermodur (open rim)				•		
> PP						
> PP - soft-close						
> wood						
Bidets						
> floor-standing				•		
> floor-standing BTW	•	•	•	•	•	•
> wall-mounted	•	•	•	•	•	•
Bidets covers						
> thermodur						
> thermodur - soft-close		•				
Washbasins						
> countertop			•			
> countertop / wall-mounted						•
> wall-mounted			•			
> wall-mounted - siphon cover			•			•
> wall-mounted - pedestal						•
> wall-mounted - corner			•			
> recessed			•	•		



Loft
8 Models

Page 050



Grecia
6 Models

Page 056



Regina
4 Models

Page 060



Munique
11 Models

Page 064



Cent
7 Models

Page 072



Infantil
3 Models

Page 078



Mobil
2 Models

Page 082

Toilets							
> floor-standing				•			
> floor-standing BTW						•	
> floor-standing close-coupled	•	•	•	•	•		•
> floor-standing close-coupled BTW							
> wall-mounted				•			
Toilet seats and covers							
> thermodur							
> thermodur - slim				•	•		
> thermodur (take-off system)	•		•				•
> thermodur - slim (take-off system)							
> thermodur - soft-close							
> thermodur - soft-close (take-off system)	•		•	•			
> thermodur - soft-close - slim (take-off system)					•		
> thermodur (open rim)							
> PP	•			•	•		
> PP - soft-close	•						
> wood		•	•	•		•	
Bidets							
> floor-standing	•	•	•	•	•		
> floor-standing BTW							
> wall-mounted				•			
Bidets covers							
> thermodur			•				
> thermodur - soft-close							
Washbasins							
> countertop	•						
> countertop / wall-mounted							
> wall-mounted	•	•	•	•	•		•
> wall-mounted - siphon cover	•			•	•		
> wall-mounted - pedestal	•	•	•	•	•		
> wall-mounted - corner							
> recessed		•				•	

Coral



CORAL wall-mounted *rimless* toilet with PLAN flush plate, CORAL wall-mounted bidet, ARENA countertop washbasin, SILK faucets and MAYARA mirror



FLOOR-STANDING CLOSE-COUPLED BTW TOILETS



Floor-standing close-coupled *rimless* BTW toilet 62 D/O

370 × 620 × 780 mm

> dual outlet
> rimless toilet - hygienic and easy to clean
> in the box: toilet, bend connector and fixing kit

Reference	Weight	Pieces per pallet	€
S100 6388 1700 000	30	20	•

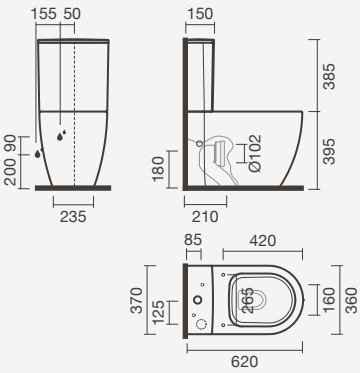

Toilet cistern

> dual flush 3/4,5 litres (mechanism assembled)
> button-activated flushing system (dual)
> in the box: toilet cistern and flushing mechanism

Lower water inlet			
S100 6406 6600 000	13	20	•

Toilet seats and covers

Thermodur - soft-close (take-off system)			
S800 0656 1800 000	2	-	•
Thermodur - soft-close - slim (take-off system)			
S800 0656 2600 000	2	-	•
Thermodur (take-off system)			
S800 0656 2300 000	2	-	•

Complete set
Toilet + Cistern + Seat and cover •

FLOOR-STANDING BTW TOILETS





Floor-standing BTW toilet 56 D/O

360 × 560 × 400 mm

> dual outlet
> in the box: toilet, bend connector and fixing kit

Reference	Weight	Pieces per pallet	€
S100 9682 3300 000	27	15	•

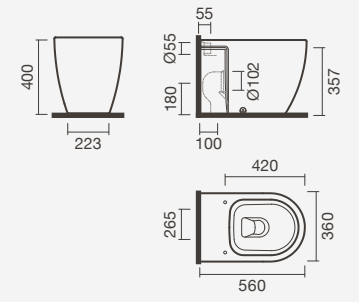

Toilet seats and covers

Thermodur - soft-close (take-off system)			
S800 0656 1800 000	2	-	•
Thermodur - soft-close - slim (take-off system)			
S800 0656 2600 000	2	-	•
Thermodur (take-off system)			
S800 0656 2300 000	2	-	•

Complete set
Toilet + Seat and cover •

WALL-MOUNTED TOILETS



Wall-mounted *rimless* toilet 56 H/O

365 × 555 × 400 mm

> horizontal outlet
> rimless toilet - hygienic and easy to clean
> in the box: toilet and pre-installation kit

Reference	Weight	Pieces per pallet	€
S102 0248 1700 000	27	20	•

Toilet seats and covers

Thermodur - soft-close (take-off system)			
S800 0656 1800 000	2	-	•
Thermodur - soft-close - slim (take-off system)			
S800 0656 2600 000	2	-	•
Thermodur (take-off system)			
S800 0656 2300 000	2	-	•

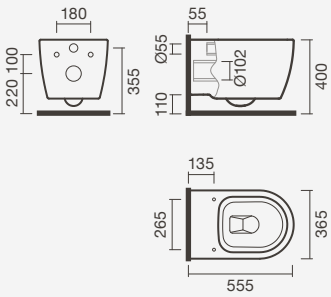

Complete set
Toilet + Seat and cover •

FLOOR-STANDING BTW BIDETS



Floor-standing BTW bidet 54

360 × 540 × 395 mm

> in the box: bidet and fixing kit

Reference	Weight	Pieces per pallet	€
S100 6363 4900 000	24	18	•

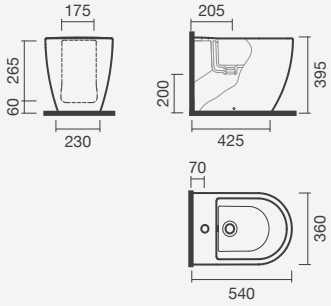

WALL-MOUNTED BIDETS



Wall-mounted bidet 56

360 × 555 × 400 mm

> in the box: bidet and pre-installation kit

Reference	Weight	Pieces per pallet	€
S100 6373 4900 000	23	18	•

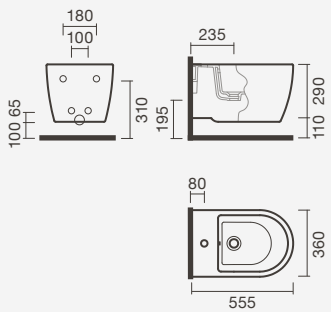

Glam



AMAN *freestanding* bathtub and GLAM wall-mounted *rimless* toilet with BALANCE floor-mounted bath faucet and PLAN flush plate



FLOOR-STANDING CLOSE-COUPLED BTW TOILETS

Floor-standing close-coupled BTW toilet 60 D/O

365 × 600 × 785 mm

> dual outlet
> in the box: toilet, bend connector and fixing kit



Reference	Weight	Pieces per pallet	€
S100 6932 3300 000	26	20	•

Toilet cistern

> dual flush 3/4,5 litres (mechanism assembled)
> button-activated flushing system (dual)
> in the box: toilet cistern and flushing mechanism

Lower water inlet			
S100 6956 6600 000	9	20	•

Toilet seats and covers



Thermodur - soft-close - slim (take-off system)			
S802 0028 1600 000	2	-	•
Thermodur - soft-close (take-off system)			
S800 0678 1600 000	2	-	•
Thermodur - slim (take-off system)			
S802 0028 1800 000	2	-	•
Thermodur (take-off system)			
S800 0678 1800 000	2	-	•

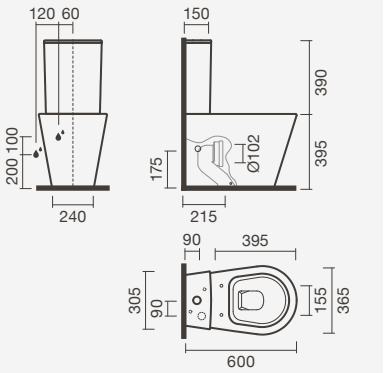

Complete set
Toilet + Cistern + Seat and cover •

WALL-MOUNTED TOILETS

Wall-mounted *rimless* toilet 53 H/O

360 × 525 × 400 mm

> horizontal outlet
> rimless toilet - hygienic and easy to clean
> in the box: toilet and pre-installation kit



Reference	Weight	Pieces per pallet	€
S102 0088 2100 000	22	27	•

Toilet seats and covers

Thermodur - soft-close - slim (take-off system)			
S802 0028 1600 000	2	-	•
Thermodur - soft-close (take-off system)			
S800 0678 1600 000	2	-	•
Thermodur - slim (take-off system)			
S802 0028 1800 000	2	-	•
Thermodur (take-off system)			
S800 0678 1800 000	2	-	•

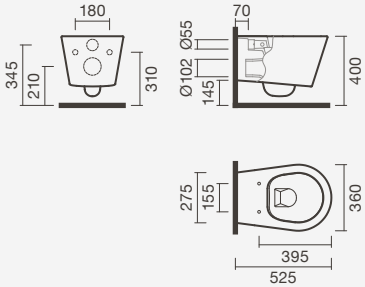

Complete set
Toilet + Seat and cover •



Detail of GLAM wall-mounted *rimless* toilet's flushing system with PLAN operating plate

FLOOR-STANDING BTW BIDETS

Floor-standing BTW bidet 53

365 × 530 × 400 mm

> in the box: bidet and fixing kit

Reference	Weight	Pieces per pallet	€
S100 6683 4900 000	23	20	•

Bidet covers

Thermodur - soft-close (take-off system)			
S800 0678 1600 001	2	-	•





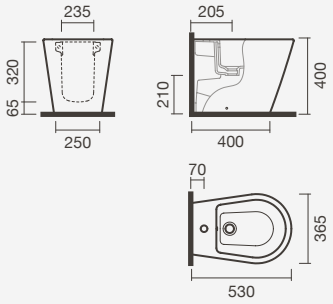

Complete set
Bidet + Cover •

WALL-MOUNTED BIDETS

Wall-mounted bidet 53

365 × 530 × 400 mm

> in the box: bidet and pre-installation kit

Reference	Weight	Pieces per pallet	€
S100 6903 4900 000	18	27	•

Bidet covers

Thermodur - soft-close (take-off system)			
S800 0678 1600 001	2	-	•





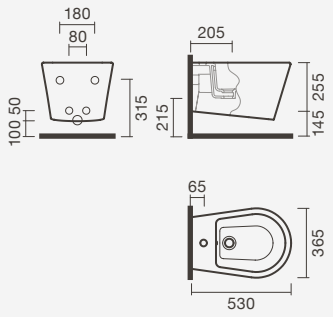

Complete set
Bidet + Cover •



GLAM floor-standing close-coupled BTW toilet with *slim* seat & cover - with soft-close and take-off system

Be You



BE YOU floor-standing close-coupled BTW toilet, BE YOU floor-standing BTW bidet and BE YOU 50 recessed washbasin with UNIC faucets



FLOOR-STANDING CLOSE-COUPLED TOILETS



Floor-standing close-coupled toilet 64 D/O

370 × 640 × 795 mm

> dual outlet
> in the box: toilet, bend connector and fixing kit

Reference	Weight	Pieces per pallet	€
S100 9652 3600 000	30	20	•

Toilet cistern

> dual flush 3/4,5 litres (mechanism assembled)
> button-activated flushing system (dual)
> in the box: toilet cistern and flushing mechanism

Lower water inlet			
S100 6286 6600 000	10	60	•

Toilet seats and covers

Thermodur - soft-close			
S800 0646 1800 000	2	1	•
Thermodur			
S800 0646 2300 000	2	1	•

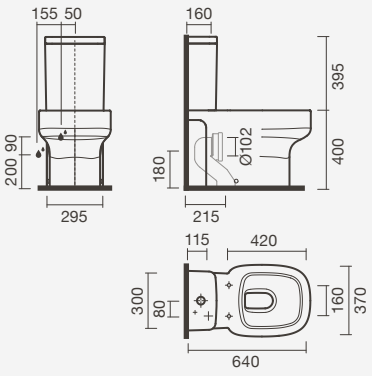

Complete set
Toilet + Cistern + Seat and cover •

FLOOR-STANDING CLOSE-COUPLED BTW TOILETS



Floor-standing close-coupled BTW toilet 64 D/O

370 × 640 × 790 mm

> dual outlet
> in the box: toilet, bend connector and fixing kit

Reference	Weight	Pieces per pallet	€
S100 6242 3300 000	30	20	•

Toilet cistern

> dual flush 3/4,5 litres (mechanism assembled)
> button-activated flushing system (dual)
> in the box: toilet cistern and flushing mechanism

Lower water inlet			
S100 6286 6600 000	10	60	•

Toilet seats and covers

Thermodur - soft-close			
S800 0646 1800 000	2	1	•
Thermodur			
S800 0646 2300 000	2	1	•

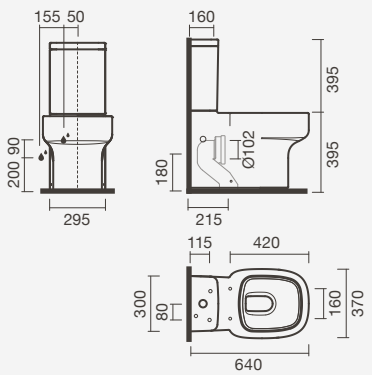

Complete set
Toilet + Cistern + Seat and cover •

FLOOR-STANDING BTW TOILETS



Floor-standing BTW toilet 55 D/O

370 × 545 × 400 mm

> dual outlet
> in the box: toilet, bend connector and fixing kit

Reference	Weight	Pieces per pallet	€
S100 6232 3300 000	25	15	•

Toilet seats and covers

Thermodur - soft-close			
S800 0646 1800 000	2	1	•
Thermodur			
S800 0646 2300 000	2	1	•

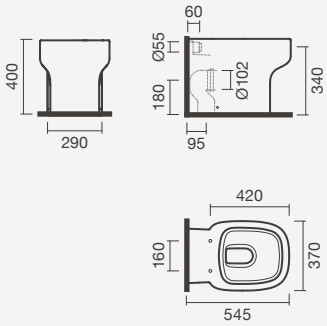

Complete set
Toilet + Seat and cover •

WALL-MOUNTED TOILETS



Wall-mounted toilet 54 H/O

370 × 540 × 400 mm

> horizontal outlet
> in the box: toilet and pre-installation kit

Reference	Weight	Pieces per pallet	€
S100 6251 8200 000	23	27	•

Toilet seats and covers

Thermodur - soft-close			
S800 0646 1800 000	2	1	•
Thermodur			
S800 0646 2300 000	2	1	•

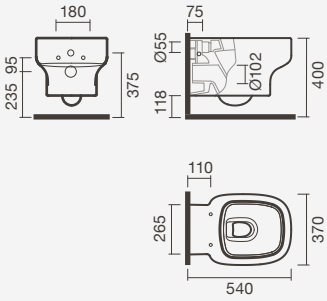

Complete set
Toilet + Seat and cover •



BE YOU floor-standing BTW bidet and BE YOU floor-standing BTW toilet with UNIC faucet and PLAN flush plate

FLOOR-STANDING BTW BIDETS



Floor-standing BTW bidet 54

370 × 540 × 400 mm

> in the box: bidet and fixing kit

Reference	Weight	Pieces per pallet	€
S100 6263 4900 000	24	20	•

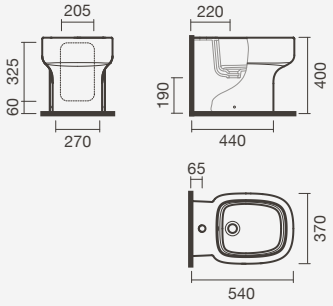

WALL-MOUNTED BIDETS



Wall-mounted bidet 54

370 × 540 × 400 mm

> in the box: bidet and pre-installation kit

Reference	Weight	Pieces per pallet	€
S100 6273 4900 000	21	27	•

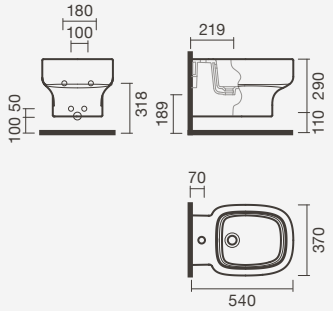

COUNTERTOP WASHBASINS







Washbasins 60, 55 and 40

> countertop application
> with tap hole (central), with overflow
> in the box: washbasin

600 x 430 x 165 mm	Weight	Pieces per pallet	€
S102 0041 6400 000	19	32	•
550 x 430 x 165 mm			
S100 6173 6200 000	17	32	•
400 x 430 x 165 mm			
S100 6163 6200 000	14	32	•

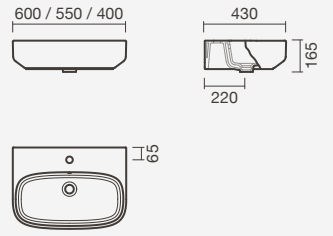

WALL-MOUNTED WASHBASINS







Washbasins 60, 55 and 40

> wall-mounted application
> with tap hole (central), with overflow
> compatible with Be You siphon cover
> in the box: washbasin and fixing kit

600 x 430 x 165 mm	Weight	Pieces per pallet	€
S102 0041 7200 000	19	32	•
550 x 430 x 165 mm			
S100 6171 7200 000	17	32	•
400 x 430 x 165 mm			
S100 6161 7200 000	14	32	•

Siphon cover

> wall-mounted application
> compatible with wall-mounted washbasins: Be You 60, 55 and 40
> in the box: siphon cover and fixing kit

Reference	Weight	Pieces per pallet	€
S100 9661 7800 000	10	30	•

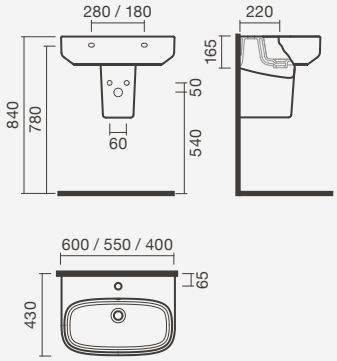

WALL-MOUNTED WASHBASINS - COMPACT - CORNER



Washbasin 42

420 × 460 × 170 mm

> wall-mounted application (corner)
> with tap hole (central), with overflow
> in the box: washbasin and fixing kit

Reference	Weight	Pieces per pallet	€
S102 0061 7200 000	11	32	•

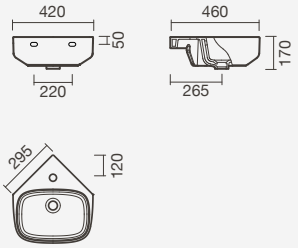

RECESSED WASHBASINS



Washbasin 63

630 × 400 × 120 mm

> recessed application (in countertop)
> with tap hole (on the right), without overflow
> incompatible with cold start faucets
> in the box: washbasin

Reference	Weight	Pieces per pallet	€
S100 6221 6700 000	12	60	•

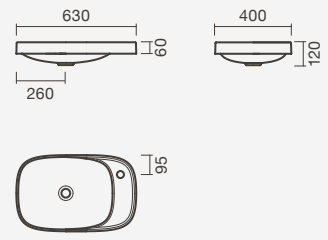

RECESSED WASHBASINS





Washbasins 60 and 50

> recessed application (in countertop)
> with tap hole (central), without overflow
> in the box: washbasin

600 x 460 x 120 mm	Weight	Pieces per pallet	€
S100 6211 6400 000	15	32	•
500 x 460 x 120 mm			
S100 6191 6400 000	12	32	•

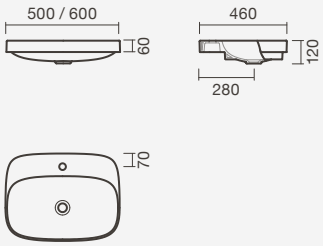





Washbasins 60 and 50

> recessed application (in countertop)
> without tap hole, without overflow
> in the box: washbasin

600 x 350 x 120 mm	Weight	Pieces per pallet	€
S100 6205 0400 000	10	32	•
500 x 350 x 120 mm			
S100 6185 0400 000	8	32	•

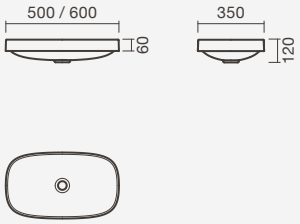



BE YOU 50 recessed washbasin without tap hole with UNIC high spout faucet



BE YOU 55 wall-mounted washbasin with UNIC faucet

Nex



NEX floor-standing bidet and floor-standing close-coupled toilet with UNIC faucet, EVOLVE shower enclosure and UNIC shower system


LO
VE

FLOOR-STANDING CLOSE-COUPLED TOILETS



Floor-standing close-coupled toilet 67 D/O

375 × 665 × 760 mm

> dual oulet
> in the box: toilet, bend connector and fixing kit

Reference	Weight	Pieces per pallet	€
S100 7562 3300 000	24	15	•

Toilet cistern

> dual flush 3/6 litres (mechanism assembled)
> button-activated flushing system (dual)
> in the box: toilet cistern and flushing mechanism

Lower water inlet			
S102 0170 4500 000	14	30	•

Toilet seats and covers



Thermodur - open rim (comfort)			
S802 0130 0000 000	3	-	•
Thermodur - soft-close (take-off system)			
S802 0018 1600 000	3	-	•
Thermodur (take-off system)			
S802 0018 1800 000	3	-	•
Thermodur - soft-close - slim (take-off system)			
S802 0048 1600 000	3	-	•

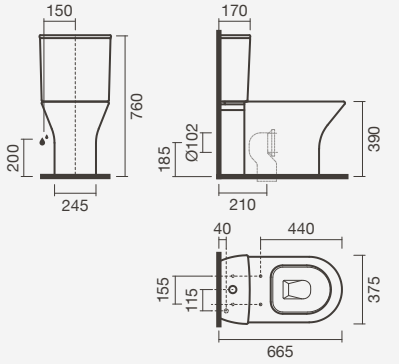

Complete set

Toilet + Cistern + Seat and cover •

FLOOR-STANDING CLOSE-COUPLED BTW TOILETS



Floor-standing close-coupled BTW toilet 61 D/O

380 × 610 × 755 mm

> dual oulet
> in the box: toilet, bend connector and fixing kit

Reference	Weight	Pieces per pallet	€
S100 7575 0300 002	25	15	•

Toilet cistern

> dual flush 3/4,5 litres (mechanism assembled)
> button-activated flushing system (dual)
> in the box: toilet cistern and flushing mechanism

Lower water inlet			
S102 0150 4500 000	13	30	•

Toilet seats and covers



Thermodur - open rim (comfort)			
S802 0130 0000 000	3	-	•
Thermodur - soft-close (take-off system)			
S802 0018 1600 000	3	-	•
Thermodur (take-off system)			
S802 0018 1800 000	3	-	•
Thermodur - soft-close - slim (take-off system)			
S802 0048 1600 000	3	-	•

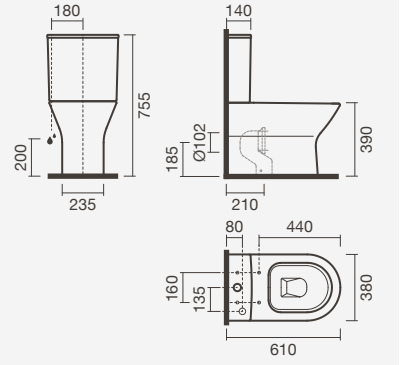

Complete set

Toilet + Cistern + Seat and cover •

FLOOR-STANDING TOILETS





Floor-standing BTW toilet 54 D/O

360 × 540 × 390 mm

> dual oulet
> in the box: toilet, bend connector and fixing kit

Reference	Weight	Pieces per pallet	€
S100 7582 3300 000	23	15	•

Toilet seats and covers

N	**Thermodur - open rim (comfort)**			
	S802 0130 0000 000	3	-	•
	Thermodur - soft-close (take-off system)			
	S802 0018 1600 000	3	-	•
	Thermodur (take-off system)			
	S802 0018 1800 000	3	-	•
	Thermodur - soft-close - slim (take-off system)			
	S802 0048 1600 000	3	-	•

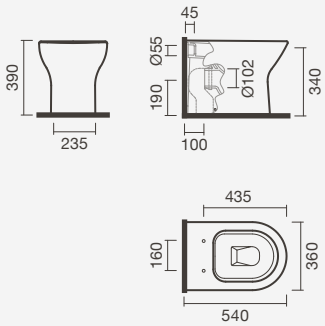

Complete set
Toilet + Seat and cover •

WALL-MOUNTED TOILETS





Wall-mounted toilet 54 H/O

360 × 535 × 405 mm

> horizontal outlet
> in the box: toilet and pre-installation kit

Reference	Weight	Pieces per pallet	€
S100 7591 8200 000	23	27	•

Toilet seats and covers

N	**Thermodur - open rim (comfort)**			
	S802 0130 0000 000	3	-	•
	Thermodur - soft-close (take-off system)			
	S802 0018 1600 000	3	-	•
	Thermodur (take-off system)			
	S802 0018 1800 000	3	-	•
	Thermodur - soft-close - slim (take-off system)			
	S802 0048 1600 000	3	-	•

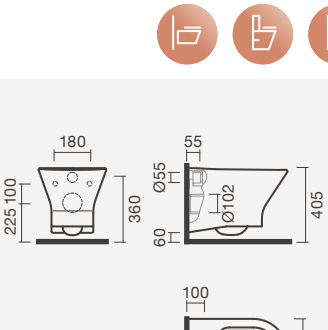

Complete set
Toilet + Seat and cover •



NEX floor-standing bidet and floor-standing close-coupled toilet with UNIC bidet mixer

We regret to inform all distribution partners located in Argelia, France, Germany, Greece, Jordan, United Arab Emirates and United Kingdom we will be unable to fulfill orders of products from the NEX collection (except for the NEX washbasins and NEX bathtubs).

FLOOR-STANDING BIDETS

Floor-standing bidet 57

360 × 565 × 390 mm

> in the box: bidet and fixing kit

Reference	Weight	Pieces per pallet	€
S100 7413 4900 000	19	15	•



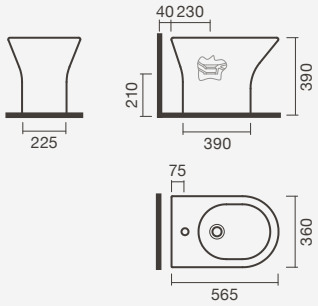



NEX wall-mounted bidet and toilet with UNIC bidet mixer and STEP UP shower enclosure - 2L2 + 2L2 model

FLOOR-STANDING BTW BIDETS

Floor-standing BTW 54

360 × 535 × 385 mm

> in the box: bidet and fixing kit

Reference	Weight	Pieces per pallet	€
S100 7423 4900 000	20	15	•



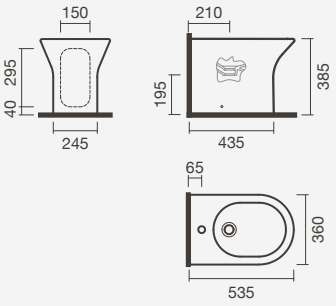

WALL-MOUNTED BIDETS

Wall-mounted bidet 53

360 × 525 × 400 mm

> in the box: bidet and pre-installation kit

Reference	Weight	Pieces per pallet	€
S100 7433 4900 000	20	27	•



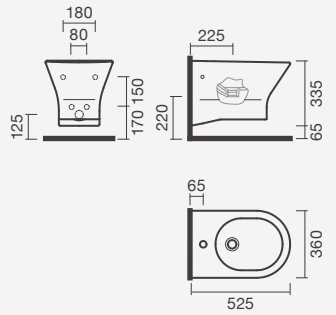



NEX floor-standing BTW toilet

We regret to inform all distribution partners located in Argelia, France, Germany, Greece, Jordan, United Arab Emirates and United Kingdom we will be unable to fulfill orders of products from the NEX collection (except for the NEX washbasins and NEX bathtubs).



NEX floor-standing close-coupled toilet with STEP UP shower enclosure - L2E model

RECESSED WASHBASINS



Washbasin 56

560 × 470 × 185 mm

> recessed application (in countertop)
> with tap hole (central to bowl), with overflow
> in the box: washbasin

Reference	Weight	Pieces per pallet	€
S100 7481 6400 000	13	24	•

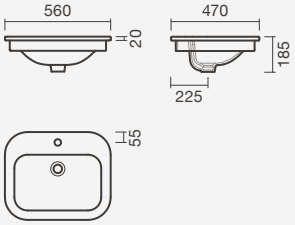



Washbasin 56

560 × 400 × 190 mm

> recessed application (in or under countertop)
> without tap hole, with overflow
> in the box: washbasin and fixing kit

Reference	Weight	Pieces per pallet	€
S100 7473 0500 000	10	24	•

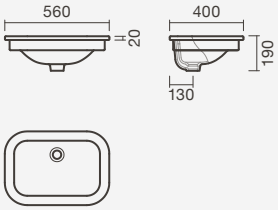



NEX 56 recessed washbasin with UNIC washbasin faucet

We regret to inform all distribution partners located in Argelia, France, Germany, Greece, Jordan, United Arab Emirates and United Kingdom we will be unable to fulfill orders of products from the NEX collection (except for the NEX washbasins and NEX bathtubs).

Pop Square



POP SQUARE wall-mounted *rimless* toilet with *slim* seat & cover and wall-mounted bidet, FICUS vanity unit 100 and cabinet in textured gray and PRIM faucets



FLOOR-STANDING CLOSE-COUPLED BTW TOILETS





Floor-standing close-coupled *rimless* BTW toilet 60 D/O

355 × 600 × 785 mm

> dual outlet
> rimless toilet - hygienic and easy to clean
> in the box: toilet, bend connector and fixing kit

Reference	Weight	Pieces per pallet	€
S102 0408 1700 000	29	20	•

Toilet cistern

> dual flush 3/4,5 liters (mechanism assembled)
> button-activated flushing system (dual)
> in the box: toilet cistern and flushing mechanism

Lower water inlet			
S100 7736 6600 001	12	60	•

Toilet seats and covers

Thermodur - soft-close - slim			
S802 0086 1600 000	2	-	•
Thermodur - soft-close			
S802 0086 1800 000	2	-	•
Thermodur - slim			
S802 0086 2300 000	2	-	•
Thermodur			
S802 0086 2000 000	2	-	•

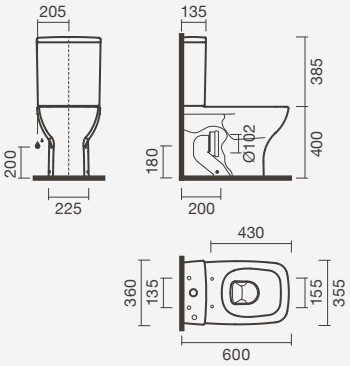

Complete set
Toilet + Cistern + Seat and cover •

WALL-MOUNTED TOILETS





Wall-mounted *rimless* toilet 53 H/O

355 × 530 × 400 mm

> horizontal outlet
> rimless toilet - hygienic and easy to clean
> in the box: toilet, bend connector and fixing kit

Reference	Weight	Pieces per pallet	€
S102 0408 2200 000	23	20	•

Toilet seats and covers

Thermodur - soft-close - slim			
S802 0086 1600 000	2	-	•
Thermodur - soft-close			
S802 0086 1800 000	2	-	•
Thermodur - slim			
S802 0086 2300 000	2	-	•
Thermodur			
S802 0086 2000 000	2	-	•

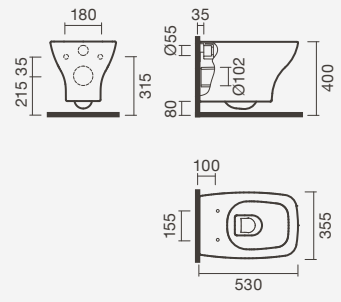

Complete set
Toilet + Seat and cover •

FLOOR-STANDING BTW BIDETS

Floor-standing BTW bidet 53

355 × 530 × 400 mm

> in the box: bidet and fixing kit



Reference	Weight	Pieces per pallet	€
S102 0530 0000 001	22	24	•

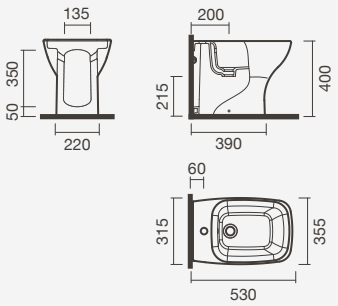

WALL-MOUNTED BIDETS

Wall-mounted bidet 53

355 × 530 × 400 mm

> in the box: bidet and pre-installation kit



Reference	Weight	Pieces per pallet	€
S102 0530 0000 000	20	24	•

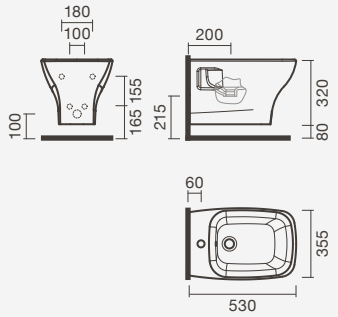



POP SQUARE floor-standing close-coupled *rimless* BTW toilet with *slim* seat & cover and FICUS vanity unit 100 in textured walnut

Pop Art



POP ART floor-standing close-coupled BTW toilet, floor-standing BTW bidet and countertop / wall-mounted washbasins with LOOP faucets and VITA shower tray



FLOOR-STANDING CLOSE-COUPLED BTW TOILETS



Floor-standing close-coupled BTW toilet 64 D/O

355 × 640 × 790 mm

> dual outlet
> in the box: toilet, bend connector and fixing kit

Reference	Weight	Pieces per pallet	€
S100 7692 3300 000	27	20	•

Toilet cistern

> dual flush 3/4,5 litres (mechanism assembled)
> button-activated flushing system (dual)
> in the box: toilet cistern and flushing mechanism

Lower water inlet			
S102 0070 4500 000	13	60	•

Toilet seats and covers

Thermodur - soft-close (take-off system)			
S800 0756 1800 001	2	-	•
Thermodur (take-off system)			
S800 0756 2300 001	2	-	•

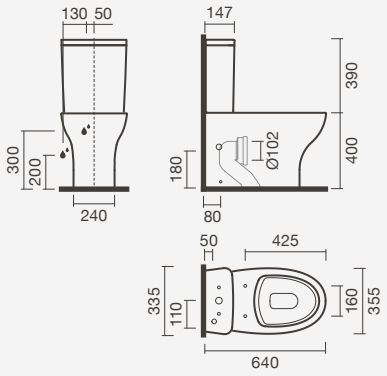

Complete set
Toilet + Cistern + Seat and cover •

FLOOR-STANDING BTW TOILETS



Floor-standing BTW toilet 54 D/O

355 × 540 × 400 mm

> dual outlet
> in the box: toilet, bend connector and fixing kit

Reference	Weight	Pieces per pallet	€
S100 7662 3300 000	21	15	•

Toilet seats and covers

Thermodur - soft-close (take-off system)			
S800 0756 1800 001	2	-	•
Thermodur (take-off system)			
S800 0756 2300 001	2	-	•

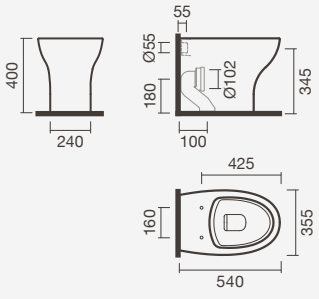

Complete set
Toilet + Seat and cover •

WALL-MOUNTED TOILETS

Wall-mounted *rimless* toilet 54 H/O

325 × 540 × 400 mm

> horizontal outlet
> rimless toilet - hygienic and easy to clean
> in the box: toilet and pre-installation kit

Reference	Weight	Pieces per pallet	€
S102 0338 2100 000	25	18	•



Toilet seats and covers

Thermodur - soft-close (take-off system)

S800 0756 1800 001	2	-	•

Thermodur (take-off system)

S800 0756 2300 001	2	-	•

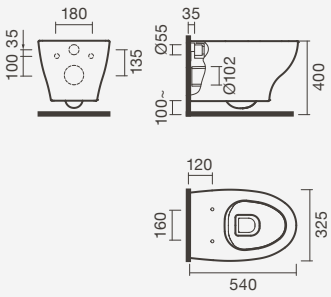

Complete set
Toilet + Seat and cover •

FLOOR-STANDING BTW BIDETS

Floor-standing BTW bidet 53

360 × 525 × 400 mm

> in the box: bidet and fixing kit

Reference	Weight	Pieces per pallet	€
S100 7643 4900 000	20	15	•



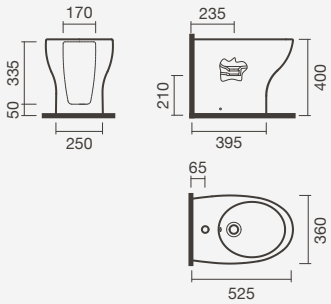

WALL-MOUNTED BIDETS

Wall-mounted bidet 54

325 × 540 × 390 mm

> in the box: bidet and pre-installation kit

Reference	Weight	Pieces per pallet	€
S102 0353 1400 000	20	18	•



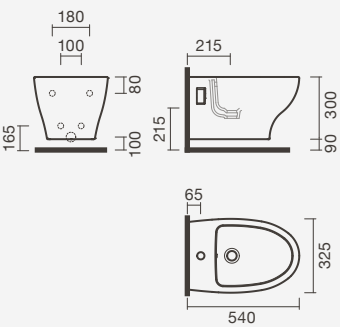

COUNTERTOP / WALL-MOUNTED WASHBASINS







Washbasins 62 and 57

> countertop / wall-mounted application
> with tap hole (central), with overflow
> compatible with Pop Art siphon cover and pedestal
> in the box: washbasin and fixing kit

620 x 485 x 185 mm	Weight	Pieces per pallet	€
S100 7843 6200 000	19	30	•
570 x 485 x 185 mm			
S100 7833 6200 000	18	30	•

Siphon cover

> wall-mounted application
> compatible with washbasins: Pop Art 62, 57 and 51
> in the box: siphon cover and fixing kit

Reference	Weight	Pieces per pallet	€
S100 7791 7800 000	9	30	•

Pedestal

> floor-mounted application
> compatible with washbasins: Pop Art 62 and 57
> in the box: pedestal

Reference	Weight	Pieces per pallet	€
S100 7780 0000 000	12	30	•

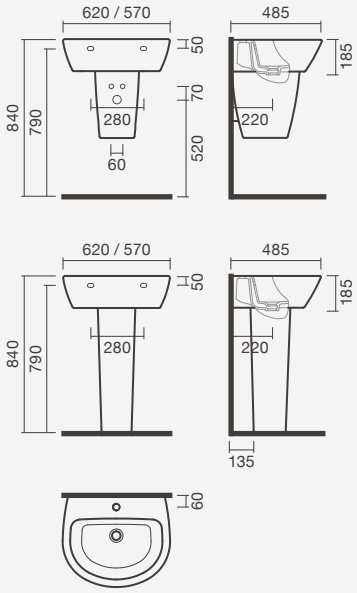

COUNTERTOP / WALL-MOUNTED WASHBASINS - COMPACT





Washbasin 51

505 × 440 × 185 mm

> countertop / wall-mounted application
> with tap hole (central), with overflow
> compatible with Pop Art siphon cover
> in the box: washbasin and fixing kit

Reference	Weight	Pieces per pallet	€
S100 7823 6200 000	13	39	•

Siphon cover

> wall-mounted application
> compatible with washbasins: Pop Art 62, 57 and 51
> in the box: siphon cover and fixing kit

Reference	Weight	Pieces per pallet	€
S100 7791 7800 000	9	30	•

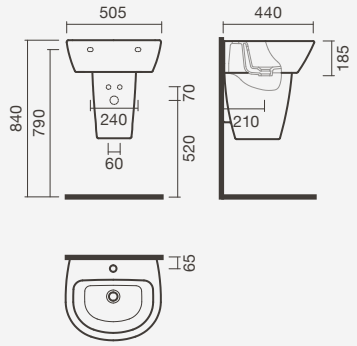

Washbasin 40

400 × 350 × 170 mm

> countertop / wall-mounted application
> with tap hole (on the right), with overflow
> incompatible with cold start faucets
> in the box: washbasin and fixing kit

Reference	Weight	Pieces per pallet	€
S100 7811 6900 000	10	48	•



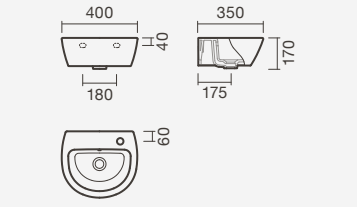



POP ART 57 countertop / wall-mounted washbasin with LOOP faucet and HEKA mirror

Loft



LOFT floor-standing bidet and close-coupled toilet with vertical outlet, MAPLE 80 vanity unit with drawers in textured walnut and LOOP faucets



FLOOR-STANDING CLOSE-COUPLED TOILETS





Floor-standing close-coupled toilet 66 V/O

360 × 660 × 795 mm

> vertical outlet
> in the box: toilet, bend connector and fixing kit

Reference	Weight	Pieces per pallet	€
S102 0558 1900 001	25	24	•

Toilet cistern

> dual flush 3/4,5 liters (mechanism unassembled)
> button-activated flushing system (dual)
> in the box: toilet cistern and flushing mechanism

	Weight	Pieces per pallet	€
Lower water inlet			
S102 0550 4500 001	13	60	•
Lateral water inlet			
S102 0550 4700 001	13	24	•

Toilet seats and covers

	Weight	Pieces per pallet	€
Thermodur - soft-close (take-off system)			
N S802 0148 1600 000	2	-	•
Thermodur (take-off system)			
N S802 0148 1800 000	2	-	•
PP - soft-close			
S802 0096 1800 000	3	-	•
PP			
S802 0096 2300 000	3	-	•

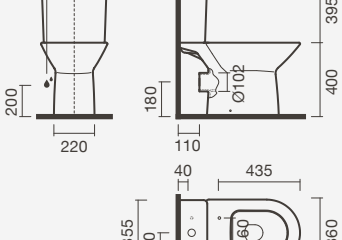

Complete set
Toilet + Cistern + Seat and cover •





Floor-standing close-coupled toilet 66 H/O

360 × 660 × 795 mm

> horizontal outlet
> in the box: toilet, bend connector and fixing kit

Reference	Weight	Pieces per pallet	€
S102 0558 1800 001	25	20	•

Toilet cistern

> dual flush 3/4,5 liters (mechanism unassembled)
> button-activated flushing system (dual)
> in the box: toilet cistern and flushing mechanism

	Weight	Pieces per pallet	€
Lower water inlet			
S102 0550 4500 001	13	60	•
Lateral water inlet			
S102 0550 4700 001	13	24	•

Toilet seats and covers

	Weight	Pieces per pallet	€
Thermodur - soft-close (take-off system)			
N S802 0148 1600 000	2	-	•
Thermodur (take-off system)			
N S802 0148 1800 000	2	-	•
PP - soft-close			
S802 0096 1800 000	3	-	•
PP			
S802 0096 2300 000	3	-	•

Complete set
Toilet + Cistern + Seat and cover •

FLOOR-STANDING BIDETS

Floor-standing bidet 54

360 × 540 × 400 mm

> in the box: bidet and fixing kit

Reference	Weight	Pieces per pallet	€
S102 0631 8200 001	18	24	•



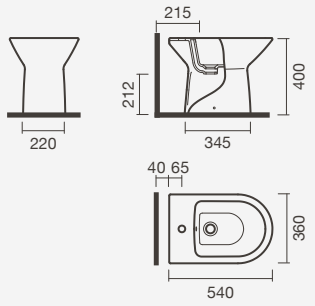



LOFT floor-standing close-coupled toilet with vertical outlet, MAPLE 60 vanity unit with doors in white and LOOP faucet

WALL-MOUNTED WASHBASINS



Washbasins 60 and 55

> wall-mounted application
> with tap hole (central), with overflow
> compatible with Loft siphon cover and pedestal
> in the box: washbasin and fixing kit

600 x 490 x 170 mm	Poids	Pièces par palette	€
S102 0573 6200 001	18	24	•
550 x 490 x 170 mm			
S102 0583 6200 001	15	24	•



Siphon cover

> wall-mounted application
> compatible with Loft 60 and 55 washbasins
> in the box: siphon cover and fixing kit

Reference			
S102 0620 0000 001	9	24	•



Pedestal

> floor-mounted application
> compatible with Loft 60 and 55 washbasins
> in the box: pedestal

Reference			
S102 0610 0000 001	11	24	•

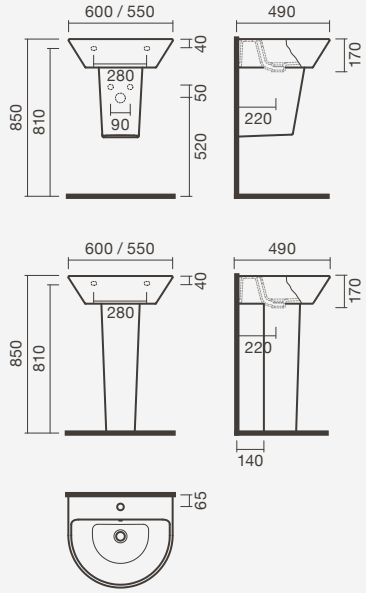

Washbasin 40

400 × 400 × 170 mm

> wall-mounted application
> with tap hole (central), with overflow
> in the box: washbasin and fixing kit

Reference	Weight	Pieces per pallet	€
S102 0593 6200 001	11	24	•



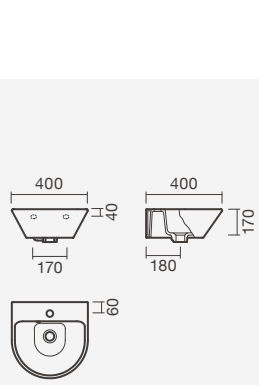

COUNTERTOP WASHBASINS

Washbasins 60 and 55

> countertop application
> with tap hole (central), with overflow
> in the box: washbasin

600 x 490 x 170 mm	Weight	Pieces per pallet	€
S102 0578 0700 001	18	24	•
550 x 490 x 170 mm			
S102 0588 0700 001	15	24	•





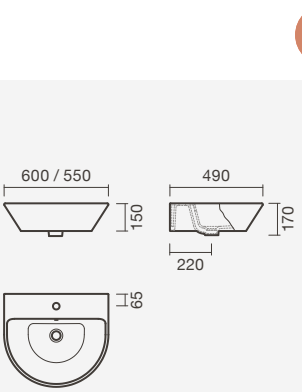



LOFT Floor-standing close-coupled toilet with vertical outlet, MAPLE 90 vanity unit with door and drawers in white and LOOP faucet

Grecia



GRECIA 73 wall-mounted washbasins with pedestals and GRECIA floor-standing close-coupled toilet and floor-standing bidet with GRECIA faucets



FLOOR-STANDING CLOSE-COUPLED TOILETS







Floor-standing close-coupled toilet 73 V/O

495 × 730 × 795mm

> vertical outlet
> in the box: toilet and fixing kit

Reference	Weight	Pieces per pallet	€
S101 0350 0000 000	23	30	•

Toilet cistern

> single 6 litres flush (mechanism assembled)
> lever-activated flushing system
> in the box: toilet cistern and flushing mechanism

Lower water inlet			
S100 7036 6800 000	16	16	•

Toilet seats and covers

Wood - wengue			
S800 0682 0020 100	3	-	•
Wood - cherry			
S800 0682 0011 300	3	-	•
Wood - white			
S800 0683 2900 000	3	-	•

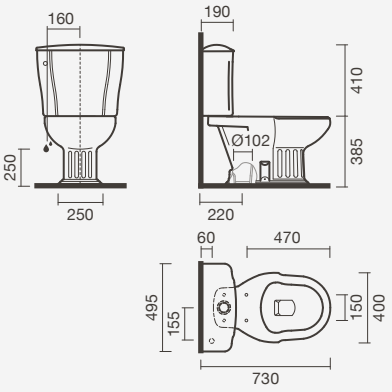

Complete set
Toilet + Cistern + Seat and cover •







Floor-standing close-coupled toilet 73 H/O

495 × 730 × 795mm

> horizontal outlet
> in the box: toilet and fixing kit

Reference	Weight	Pieces per pallet	€
S100 7022 3400 000	23	30	•

Toilet cistern

> single 6 litres flush (mechanism assembled)
> lever-activated flushing system
> in the box: toilet cistern and flushing mechanism

Lower water inlet			
S100 7036 6800 000	16	16	•

Toilet seats and covers

Wood - wengue			
S800 0682 0020 100	3	-	•
Wood - cherry			
S800 0682 0011 300	3	-	•
Wood - white			
S800 0683 2900 000	3	-	•

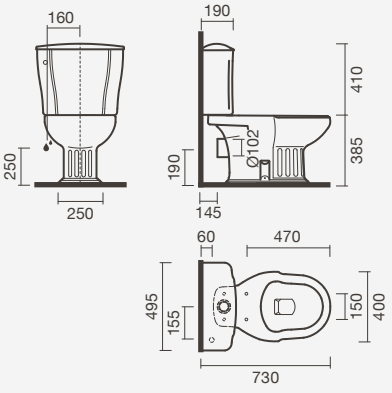

Complete set
Toilet + Cistern + Seat and cover •

FLOOR-STANDING BIDETS



Floor-standing bidet 63

405 × 630 × 390mm

> in the box: bidet and fixing kit

Reference	Weight	Pieces per pallet	€
S101 0330 0000 000	21	30	•

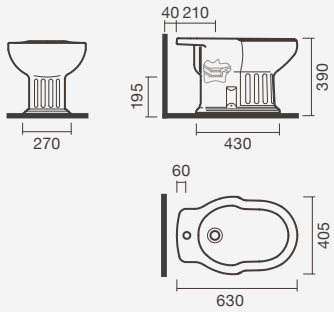

WALL-MOUNTED WASHBASINS





Washbasins 73 and 65

> wall-mounted application
> with tap hole (central), with overflow
> compatible with Grecia pedestal
> in the box: washbasin and fixing kit

730 x 610 x 335 mm	Weight	Pieces per pallet	€
S101 0340 0000 000	26	24	•
645 x 565 x 310 mm			
S100 6991 7200 000	21	36	•

Pedestal

> floor-mounted application
> compatible with washbasins: Grecia 73 and 65
> in the box: pedestal

Reference	Weight	Pieces per pallet	€
S100 6970 0000 000	11	40	•

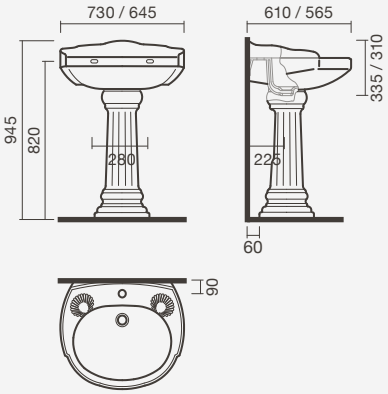

RECESSED WASHBASINS



Washbasin 58

575 × 480 × 235mm

> recessed application (in countertop)
> with tap hole (central), with overflow
> in the box: washbasin

Reference	Weight	Pieces per pallet	€
S100 6981 6400 000	11	16	•

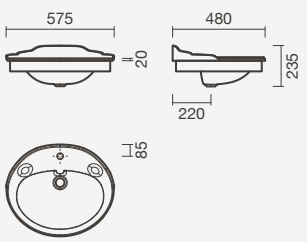

Regina



REGINA 61 wall-mounted washbasin with pedestal, REGINA floor-standing close-coupled toilet with wood seat & cover in white and floor-standing bidet



FLOOR-STANDING CLOSE-COUPLED TOILETS







Floor-standing close-coupled toilet 69 V/O

375 × 690 × 805mm

> vertical outlet
> in the box: toilet and fixing kit

Reference	Weight	Pieces per pallet	€
S101 0370 0000 000	24	30	•

Toilet cistern

> dual flush 3/6 litres (mechanism assembled)
> button-activated flushing system (dual)
> in the box: toilet cistern and flushing mechanism

Lower water inlet			
S100 8266 6600 002	12	30	•

Toilet seats and covers

Wood - wengue			
S800 0774 9420 100	3	-	•
Wood - cherry			
S800 0774 9411 300	3	-	•
Wood - white			
S800 0773 2900 000	3	-	•
Thermodur - soft-close (take-off system)			
S800 0778 1700 000	2	-	•
Thermodur (take-off system)			
S800 0778 1900 000	2	-	•



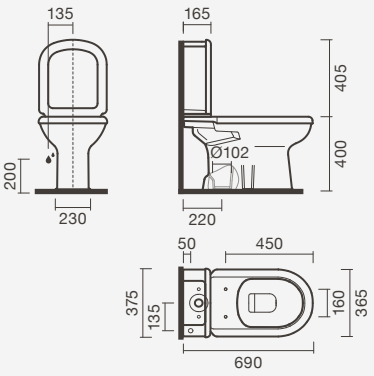

Complete set
Toilet + Cistern + Seat and cover •

FLOOR-STANDING CLOSE-COUPLED TOILETS







Floor-standing close-coupled toilet 69 H/O

375 × 690 × 805mm

> horizontal outlet
> in the box: toilet and fixing kit

Reference	Weight	Pieces per pallet	€
S100 8252 3400 001	24	30	•

Toilet cistern

> dual flush 3/6 litres (mechanism assembled)
> button-activated flushing system (dual)
> in the box: toilet cistern and flushing mechanism

Lower water inlet			
S100 8266 6600 002	12	30	•

Toilet seats and covers

Wood - wengue			
S800 0774 9420 100	3	-	•
Wood - cherry			
S800 0774 9411 300	3	-	•
Wood - white			
S800 0773 2900 000	3	-	•
Thermodur - soft-close (take-off system)			
S800 0778 1700 000	2	-	•
Thermodur (take-off system)			
S800 0778 1900 000	2	-	•



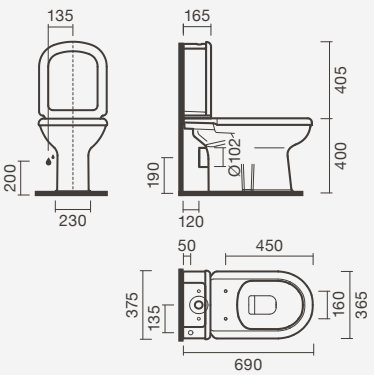

Complete set
Toilet + Cistern + Seat and cover •

FLOOR-STANDING BIDETS



Floor-standing bidet 57

385 × 565 × 425 mm

> in the box: bidet and fixing kit

Reference	Weight	Pieces per pallet	€
S101 0360 0000 000	18	30	•

Bidet cover

Thermodur			
S800 0776 2100 000	2	-	•



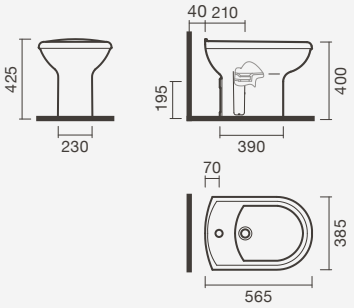

Complete set

Bidet + Cover •

WALL-MOUNTED WASHBASINS



Washbasin 61

605 × 490 × 225 mm

> wall-mounted application
> with tap hole (central), with overflow
> compatible with Regina pedestal
> in the box: washbasin and fixing kit

Reference	Weight	Pieces per pallet	€
S100 8221 7200 001	18	28	•

Pedestal

> floor-mounted application
> compatible with washbasin Regina 61
> in the box: pedestal

Reference	Weight	Pieces per pallet	€
S100 8210 0000 001	11	30	•

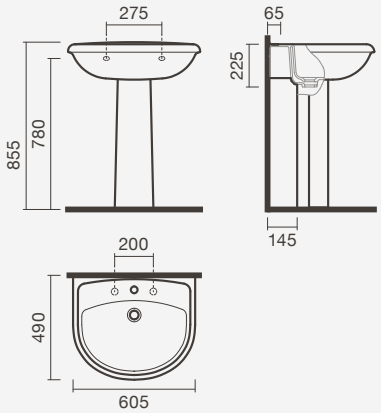

Munique



MUNIQUE 56 wall-mounted washbasin with siphon cover, MUNIQUE wall-mounted toilet and bidet with BLOOM faucets



FLOOR-STANDING CLOSE-COUPLED TOILETS





Floor-standing close-coupled toilet 68 V/O

380 × 680 × 785mm

> vertical outlet
> in the box: toilet and fixing kit

Reference	Weight	Pieces per pallet	€
S100 1262 3600 000	20	30	•

Toilet cisterns

> dual flush 3/6 litres (mechanism unassembled)
> button-activated flushing system (dual)
> in the box: toilet cistern and flushing mechanism

Lower water inlet			
S100 7376 6600 000	13	60	•
Side water inlet			
S100 7376 7500 000	13	60	•

Toilet seats and covers

Wood			
S800 0723 2900 000	3	-	•
Thermodur - soft-close (take-off system)			
S800 0728 1700 000	2	-	•
Thermodur - slim			
S800 0728 1900 000	2	-	•
PP			
S800 0724 3900 000	2	-	•

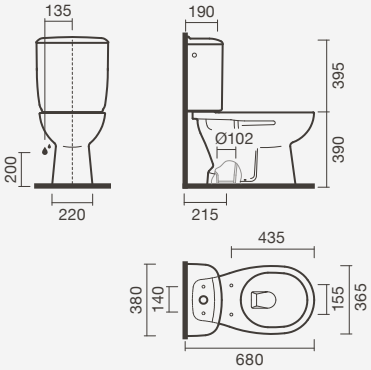

Complete set

Toilet + Cistern + Seat and cover •



MUNIQUE 60 washbasin with pedestal and BLOOM washbasin faucet

FLOOR-STANDING CLOSE-COUPLED TOILETS





Floor-standing close-coupled toilet 68 H/O

380 × 680 × 785mm

> horizontal outlet
> in the box: toilet and fixing kit

Reference	Weight	Pieces per pallet	€
S100 1272 3400 000	20	30	•

Toilet cisterns

> dual flush 3/6 litres (mechanism unassembled)
> button-activated flushing system (dual)
> in the box: toilet cistern and flushing mechanism

Lower water inlet			
S100 7376 6600 000	13	60	•
Side water inlet			
S100 7376 7500 000	13	60	•

Toilet seats and covers

Wood			
S800 0723 2900 000	3	-	•
Thermodur - soft-close (take-off system)			
S800 0728 1700 000	2	-	•
Thermodur - slim			
S800 0728 1900 000	2	-	•
PP			
S800 0724 3900 000	2	-	•

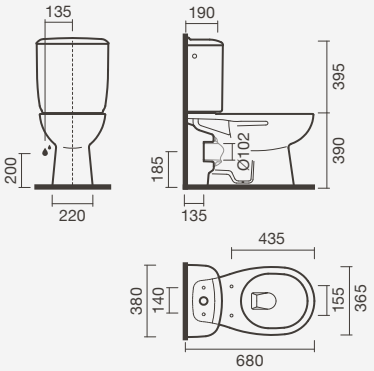

Complete set

Toilet + Cistern + Seat and cover •



MUNIQUE floor-standing close-coupled toilet, MUNIQUE floor-standing bidet and BLOOM bidet faucet

FLOOR-STANDING TOILETS

Floor-standing toilet 51 V/O

350 × 505 × 390mm

> vertical outlet
> in the box: toilet and fixing kit

Reference	Weight	Pieces per pallet	€
S100 1282 3600 000	18	30	•



Toilet cistern

> single flush: maximum of 6 litres (without mechanism)
> in the box: toilet cistern

Side water inlet			
S100 7376 7200 000	13	30	•
Cistern flushing mechanism			
TNR9 0000 0000 0067	1	-	•



Toilet seats and covers

Wood			
S800 0723 2900 000	3	-	•
Thermodur - soft-close (take-off system)			
S800 0728 1700 000	2	-	•
Thermodur - slim			
S800 0728 1900 000	2	-	•
PP			
S800 0724 3900 000	2	-	•

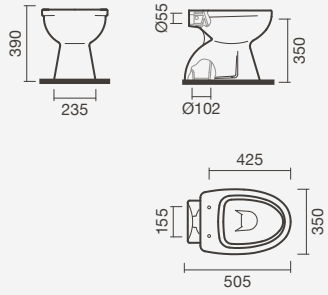

Complete set

Toilet + Seat and cover •



MUNIQUE floor-standing toilet with vertical outlet, MUNIQUE floor-standing bidet and BLOOM bidet faucet

FLOOR-STANDING TOILETS





Floor-standing toilet 46 H/O

365 × 460 × 390 mm

> horizontal outlet
> in the box: toilet and fixing kit

Reference	Weight	Pieces per pallet	€
S100 1292 3400 000	18	30	•

Toilet cistern

> single flush: maximum of 6 litres (without mechanism)
> in the box: toilet cistern

Side water inlet			
S100 7376 7200 000	13	30	•
Cistern flushing mechanism			
TNR9 0000 0000 0067	1	-	•

Toilet seats and covers

Wood			
S800 0723 2900 000	3	-	•
Thermodur - soft-close (take-off system)			
S800 0728 1700 000	2	-	•
Thermodur - slim			
S800 0728 1900 000	2	-	•
PP			
S800 0724 3900 000	2	-	•

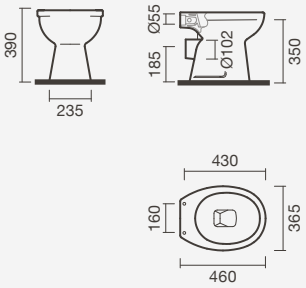

Complete set Toilet + Seat and cover		•

WALL-MOUNTED TOILETS





Wall-mounted toilet 54 H/O

365 × 540 × 410 mm

> horizontal outlet
> in the box: toilet

Reference	Weight	Pieces per pallet	€
S100 7365 1000 000	16	24	•

Toilet seats and covers

Wood			
S800 0723 2900 000	3	-	•
Thermodur - soft-close (take-off system)			
S800 0728 1700 000	2	-	•
Thermodur - slim			
S800 0728 1900 000	2	-	•
PP			
S800 0724 3900 000	2	-	•

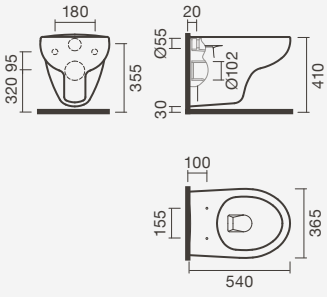

Complete set Toilet + Seat and cover		•

FLOOR-STANDING BIDETS



Floor-standing bidet 55

360 × 545 × 390mm

> in the box: bidet and fixing kit

Reference	Weight	Pieces per pallet	€
S100 1203 4900 000	16	30	•

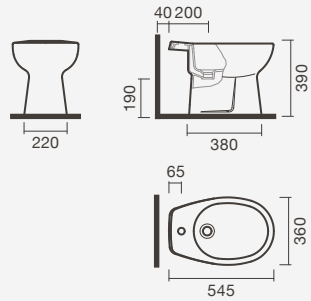

WALL-MOUNTED BIDETS



Wall-mounted bidet 54

370 × 540 × 415mm

> in the box: bidet

Reference	Weight	Pieces per pallet	€
S100 7273 4900 000	14	24	•

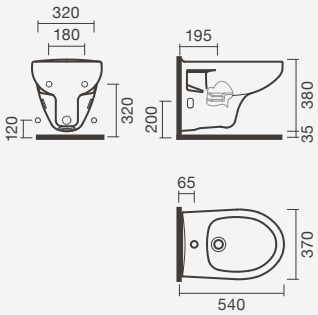

WALL-MOUNTED WASHBASINS



Washbasins 60 and 56

> wall-mounted application
> with tap hole (central), with overflow
> compatible with Munique siphon cover and pedestal
> in the box: washbasin and fixing kit

600 x 470 x 215 mm	Weight	Pieces per pallet	€
S100 1241 7200 000	16	30	•
560 x 435 x 205 mm			
S100 1221 7200 000	14	30	•



Siphon cover

> wall-mounted application
> compatible with washbasins Munique 60 and 56
> in the box: siphon cover and fixing kit

Reference	Weight	Pieces per pallet	€
S100 1211 7800 000	9	50	•



Pedestal

> floor-mounted application
> compatible with washbasins Munique 60 and 56
> in the box: pedestal

Reference	Weight	Pieces per pallet	€
S100 7280 0000 000	9	30	•

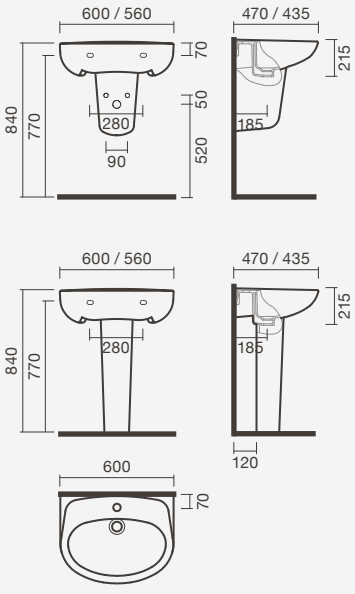

WALL-MOUNTED WASHBASINS - COMPACT



Washbasin 47

465 × 360 × 185mm

> wall-mounted application
> with tap hole (central), with overflow
> in the box: washbasin and fixing kit

Reference	Weight	Pieces per pallet	€
S100 1191 7200 000	7	48	•

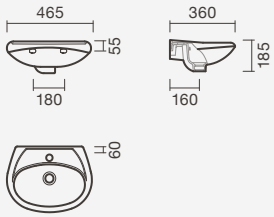



Washbasin 35

350 × 225 × 150mm

> wall-mounted application
> with tap hole (on the right), with overflow
> incompatible with cold start faucets
> in the box: washbasin

Reference	Weight	Pieces per pallet	€
S100 7151 6900 000	4	112	•

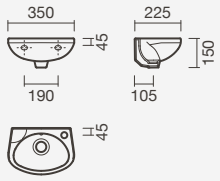



MUNIQUE 60 wall-mounted washbasin with pedestal and BLOOM washbasin faucet

Cent



CENT 55 wall-mounted washbasin with siphon cover, floor-standing bidet and close-coupled toilet with vertical outlet, seat & cover in PP and PRIM faucets



FLOOR-STANDING CLOSE-COUPLED TOILETS



Floor-standing close-coupled toilet 67 V/O

370 × 670 × 755 mm

> vertical outlet
> in the box: toilet and fixing kit

Reference	Weight	Pieces per pallet	€
S102 0642 3600 000	11	40	•

Toilet cistern

> dual flush 3/6 litres (mechanism unassembled)
> button-activated flushing system (dual)
> in the box: toilet cistern and flushing mechanism

	Reference	Weight	Pieces per pallet	€
N	**Lower water inlet** S102 0650 4500 000	10	40	•
N	**Side water inlet** S102 0650 4700 000	10	40	•

Toilet seats and covers

	Reference	Weight	Pieces per pallet	€
N	**Thermodur - slim - soft-close (take-off system)** S800 0728 1700 000	2	-	•
N	**Thermodur - slim** S800 0728 1900 000	2	-	•
	PP S802 0104 3700 000	1	-	•

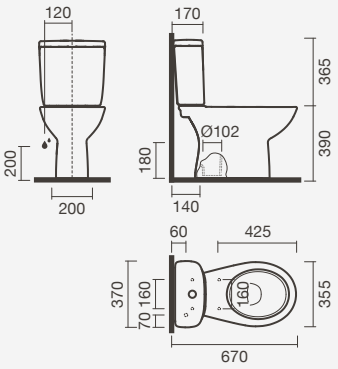

Complete set
Toilet + Cistern + Seat and cover •



PACK: Floor-standing close-coupled toilet 67 V/O + Cistern + Seat and cover

370 × 670 × 755 mm

> vertical outlet
> toilet cistern included (lower water inlet)
> toilet seat and cover in PP without soft-close
> in the box: toilet, bend connector, fixing cit, ceramic toilet cistern, flushing mechanism and toilet seat and cover in PP

Reference	Weight	Pieces per pallet	€
SP02 0355 2900 000	29	12	•



PACK: Floor-standing close-coupled toilet 67 V/O + Cistern + Seat and cover

370 × 670 × 755 mm

> vertical outlet
> toilet cistern included (side water inlet)
> toilet seat and cover in PP without soft-close
> in the box: toilet, bend connector, fixing cit, ceramic toilet cistern, flushing mechanism and toilet seat and cover in PP

Reference	Weight	Pieces per pallet	€
SP02 0355 3000 000	29	12	•

FLOOR-STANDING CLOSE-COUPLED TOILETS

Floor-standing close-coupled toilet 67 H/O

370 × 670 × 755 mm

> horizontal outlet
> in the box: toilet and fixing kit



Reference	Weight	Pieces per pallet	€
S102 0642 3400 000	17	40	•

Toilet cistern

> dual flush 3/6 litres (mechanism unassembled)
> button-activated flushing system (dual)
> in the box: toilet cistern and flushing mechanism

	Weight	Pieces per pallet	€
Lower water inlet			
S102 0650 4500 000	10	40	•
Side water inlet			
S102 0650 4700 000	10	40	•

Toilet seats and covers

	Weight	Pieces per pallet	€
Thermodur - slim - soft-close (take-off system)			
S800 0728 1700 000	2	-	•
Thermodur - slim			
S800 0728 1900 000	2	-	•
PP			
S802 0104 3700 000	1	-	•

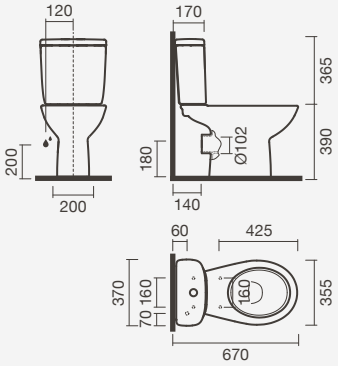

Complete set
Toilet + Cistern + Seat and cover •

PACK: Floor-standing close-coupled toilet 67 H/O + Cistern + Seat and cover

370 × 670 × 755 mm

> horizontal outlet
> toilet cistern included (lower water inlet)
> toilet seat and cover in PP without soft-close
> in the box: toilet, bend connector, fixing cit, ceramic toilet cistern, flushing mechanism and toilet seat and cover in PP



Reference	Weight	Pieces per pallet	€
SP02 0375 2900 000	29	12	•

PACK: Floor-standing close-coupled toilet 67 H/O + Cistern + Seat and cover

370 × 670 × 755 mm

> horizontal outlet
> toilet cistern included (side water inlet)
> toilet seat and cover in PP without soft-close
> in the box: toilet, bend connector, fixing cit, ceramic toilet cistern, flushing mechanism and toilet seat and cover in PP



Reference	Weight	Pieces per pallet	€
SP02 0375 3000 000	29	12	•

FLOOR-STANDING BIDETS



Floor-standing bidet 53

355 × 530 × 390 mm

> in the box: bidet and fixing kit

Reference	Weight	Pieces per pallet	€
S102 0681 7200 000	15	40	•

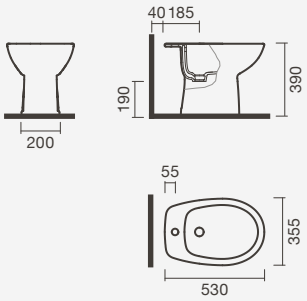

WALL-MOUNTED WASHBASINS







Washbasins 60, 55, 50 and 45

> wall-mounted application
> with tap hole (central), with overflow
> compatible with Cent siphon cover and pedestal
> in the box: washbasin and fixing kit

	600 x 450 x 200 mm	Weight	Pieces per pallet	€
N	S102 0891 7200 000	14	40	•
	550 x 450 x 200 mm			
	S102 0661 7200 000	14	40	•
	500 x 400 x 200 mm			
	S102 0671 7200 000	12	40	•
N	**450 x 400 x 200 mm**			
	S102 0881 7200 000	12	40	•

Siphon cover

> wall-mounted application
> compatible with washbasins Cent 60, 55, 50 et 45
> in the box: siphon cover and fixing kit

Reference			
S102 0700 0000 000	7	48	•

Pedestal

> floor-mounted application
> compatible with washbasins Cent 60, 55, 50 et 45
> in the box: pedestal

Reference			
S102 0690 0000 000	10	40	•

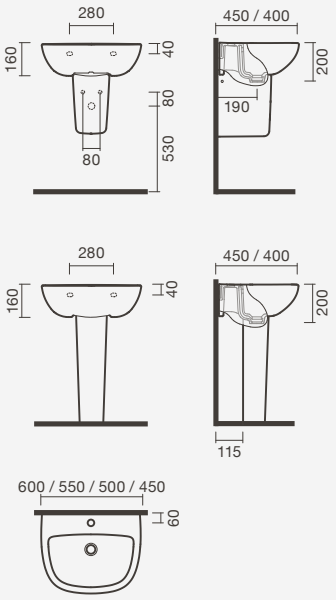



CENT 55 wall-mounted washbasin with pedestal and PRIM washbasin faucet

Infantil



INFANTIL floor-standing BTW toilets with pink, blue and white seats and covers and NEX 56 under-counter recessed washbasins



FLOOR-STANDING BTW TOILETS









Floor-standing BTW toilet 42 D/O

265 × 415 × 335 mm

> dual outlet
> in the box: toilet, bend connector and fixing kit

Reference	Weight	Pieces per pallet	€
S100 1312 3300 000	12	40	•

Toilet seats and covers

Wood - white			
S800 0733 2900 000	3	-	•
Wood - yellow			
S800 0733 2907 100	3	-	•
Wood - pink			
S800 0733 2907 500	3	-	•
Wood - blue			
S800 0733 2907 600	3	-	•

Toilet seats

Wood - white			
S800 0737 7300 000	2	-	•
Wood - yellow			
S800 0737 7307 100	2	-	•
Wood - pink			
S800 0737 7307 500	2	-	•
Wood - blue			
S800 0737 7307 600	2	-	•

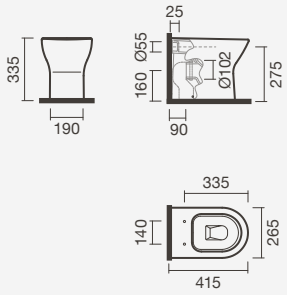

Complete set
Toilet + Seat •

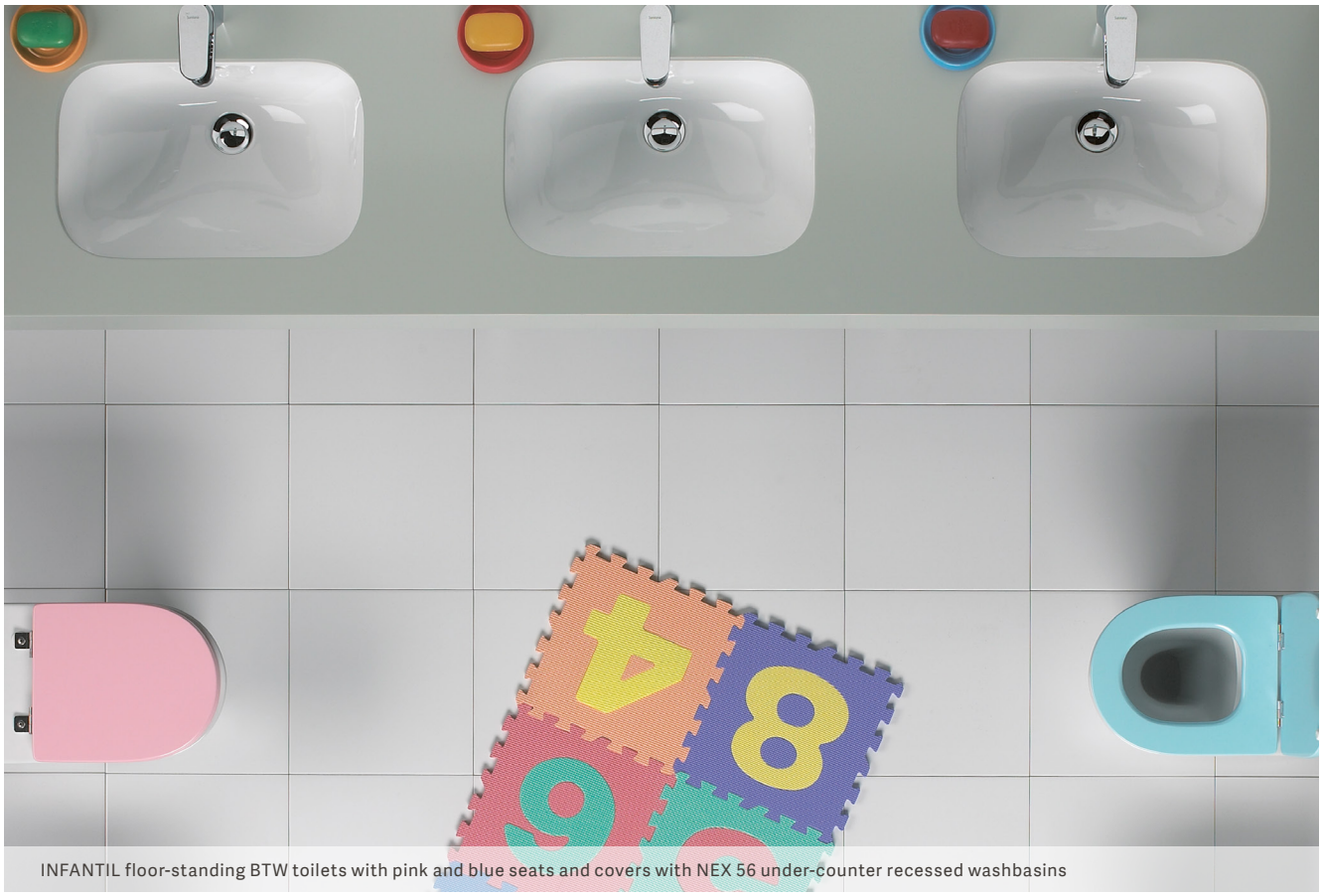

INFANTIL floor-standing BTW toilets with pink and blue seats and covers with NEX 56 under-counter recessed washbasins

RECESSED WASHBASINS



Washbasin 56

560 × 470 × 185 mm

> recessed application (in countertop)
> with tap hole (central), with overflow
> in the box: washbasin

Reference	Weight	Pieces per pallet	€
S100 7481 6400 000	13	24	•

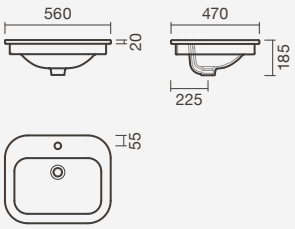



Washbasin 56

560 × 400 × 190 mm

> recessed application (in or under countertop)
> without tap hole, with overflow
> in the box: washbasin and fixing kit

Reference	Weight	Pieces per pallet	€
S100 7473 0500 000	10	24	•

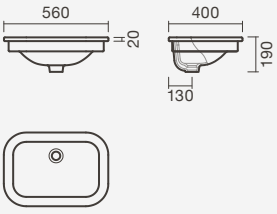



INFANTIL floor-standing BTW toilet with pink seat and cover and NEX 56 under-counter recessed washbasins

Mobil



MOBIL floor-standing close-coupled toilet with folding support bars - with and without toilet roll holder - and MOBIL washbasin with fixed support bars



FLOOR-STANDING CLOSE-COUPLED TOILETS



Floor-standing close-coupled toilet 69 D/O

425 × 690 × 885mm

> dual outlet
> in the box: toilet, bend connector and fixing kit

Reference	Weight	Pieces per pallet	€
H824 7160 0002 31	28	9	•

Toilet cistern

> dual flush 3/6 litres (mechanism assembled)
> button-activated flushing system (dual)
> in the box: toilet cistern and flushing mechanism

Lower water inlet			
H827 7130 0021 01	15	40	•

Toilet seat and cover

Thermodur (take-off system)			
S802 0036 2000 000	2	-	•

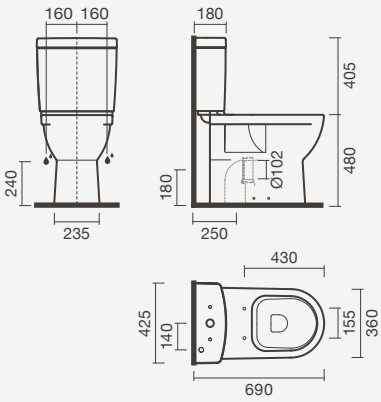

Complete set
Toilet + Cistern + Seat and cover •

WALL-MOUNTED WASHBASINS



Washbasin 64

640 × 550 × 170mm

> wall-mounted application
> with tap hole (central), without overflow
> in the box: washbasin and fixing kit

Reference	Weight	Pieces per pallet	€
H813 7140 0009 51	20	18	•

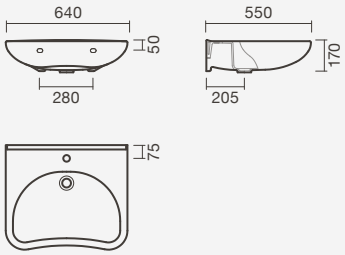



MOBIL washbasin with hydraulic washbasin support system and fixed washbasin support bars, UNIC faucet and VEGA mirror



MOBIL floor-standing close-coupled toilet with folding support bars and bidet shower set

Assembly sets for sanitaryware



INSIDE assembly set in thermo-lacquered steel with CORAL *rimless* wall-mounted toilet and PLAN electronic flushing plate

INSIDE ASSEMBLY SETS - WALL-MOUNTED TOILETS

Inside freestanding assembly set

475 × 200 × 1120 mm



> floor-mounted application
> drywall construction application (recessed)
> compatible with wall-mounted toilets and Plan, Arc and Dot flush plates (*inside* edition)
> structure in thermo-lacquered steel and cistern with insulation that complies with CE EN-14055 standard
> dual flush 3/6 litres (adjustable to 3/4,5 or 2/4 litres)
> in the box: assembly set, connections, shut-off valve and fixing kit

Reference	Weight	€
SI02 0077 9300 000	20	•

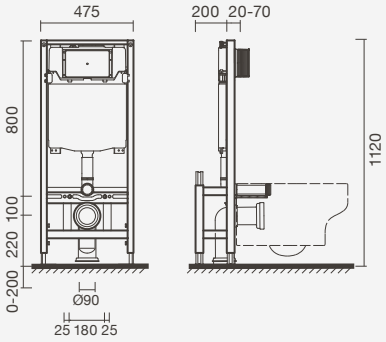

Inside compact assembly set

495 × 80-125 × 1120 mm



> wall and floor-mounted application
> drywall construction application (recessed)
> compatible with wall-mounted toilets and Plan, Arc and Dot flush plates (*inside* edition)
> structure in thermo-lacquered steel and cistern with insulation that complies with CE EN-14055 standard
> dual flush 3/6 litres (adjustable to 3/4,5 or 2/4 litres)
> in the box: assembly set, connections, shut-off valve and fixing kit

Reference	Weight	€
SI02 0067 9300 000	14	•

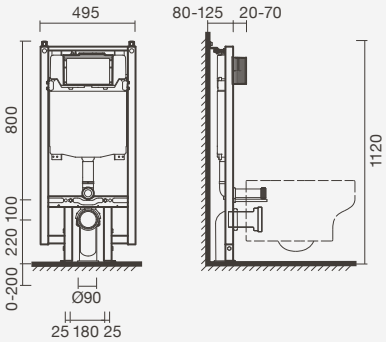

Inside assembly set

475 × 90-163 × 1120 mm



> wall and floor-mounted application
> drywall construction application (recessed)
> compatible with wall-mounted toilets and Plan, Arc and Dot flush plates (*inside* edition)
> structure in thermo-lacquered steel and cistern with insulation that complies with CE EN-14055 standard
> dual flush 3/6 litres (adjustable to 3/4,5 or 2/4 litres)
> in the box: assembly set, connections, shut-off valve and fixing kit

Reference	Weight	€
SI02 0057 9300 000	14	•

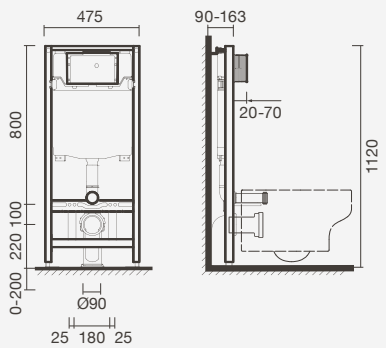

INSIDE ASSEMBLY SETS - WALL-MOUNTED TOILETS



Inside assembly set

476 × 92 × 892 mm

> wall-mounted application
> wall-in construction application (recessed)
> compatible with wall-mounted toilets and Plan, Arc and Dot flush plates (*inside* edition)
> structure in galvanized steel and cistern with insulation that complies with CE EN-14055 standard
> dual flush 3/6 litres (adjustable to 3/4,5 or 2/4 litres)
> in the box: assembly set, connections, shut-off valve and fixing kit

Reference	Weight	€
SI02 0045 8500 000	7	•

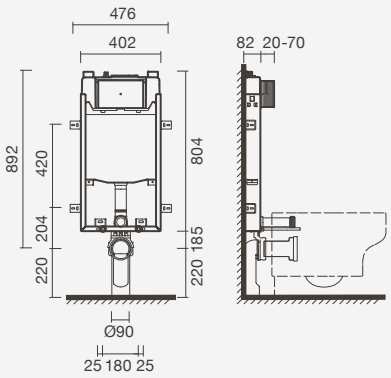

INSIDE ASSEMBLY SETS - FLOOR-STANDING TOILETS



Inside recessed cistern

460 × 90 × 572 mm

> wall-mounted application
> wall-in / drywall construction application (recessed)
> compatible with floor-standing, floor-standing BTW toilets and Plan, Arc and Dot flush plates (*inside* edition)
> cistern with insulation that complies with CE EN-14055 standard
> dual flush 3/6 litres (adjustable to 3/4,5 or 2/4 litres)
> in the box: assembly set, connections, shut-off valve and fixing kit

Reference	Weight	€
SI02 0035 9500 000	4	•

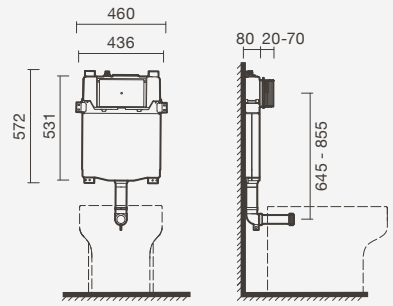



INSIDE assembly set in galvanized steel with CORAL *rimless* wall-mounted toilet, CORAL wall-mounted bidet and SUN bidet mixer

STANDARD ASSEMBLY SETS - WALL-MOUNTED BIDETS

Standard assembly set

500 × 130-195 × 1120 mm

> wall and floor-mounted application
> drywall construction application (recessed)
> compatible with wall-mounted bidets
> structure in thermo-lacquered steel
> in the box: assembly set and fixing kit



Reference	Weight	€
SI00 9647 9099 900	9	•

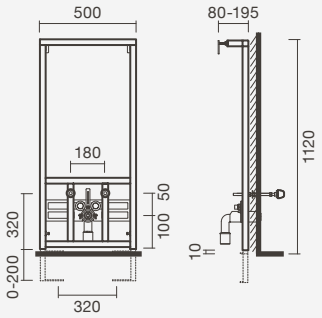

STANDARD ASSEMBLY SETS - WALL-MOUNTED WASHBASINS

Standard assembly set

500 × 130-195 × 1120 mm

> wall and floor-mounted application
> drywall construction application (recessed)
> compatible with wall-mounted washbasins
> structure in thermo-lacquered steel
> in the box: assembly set and fixing kit



Reference	Weight	€
SI00 1373 1699 900	5	•

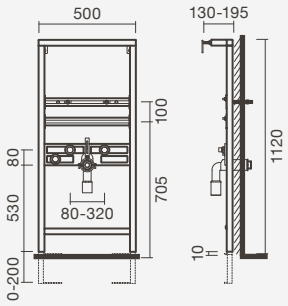

STANDARD ASSEMBLY SETS - WALL-MOUNTED URINALS

Standard assembly set

500 × 130-195 × 1320 mm

> wall and floor-mounted application
> drywall construction application (recessed)
> compatible with wall-mounted urinals with frontal fixing: Large, Capri and Mini
> structure in thermo-lacquered steel
> in the box: assembly set and fixing kit



Reference	Weight	€
SI00 1396 3399 900	8	•

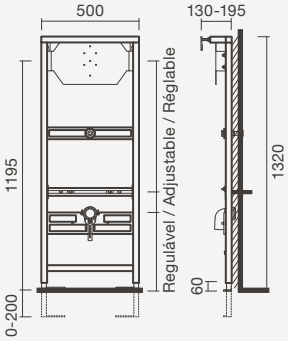

INSIDE ASSEMBLY SET - WALL-MOUNTED BIDETS

NEW

Inside assembly set

420 × 80 × 240 mm

> wall-mounted application
> wall-in construction application (recessed)
> compatible with wall-mounted bidets
> structure in galvanized steel
> in the box: assembly set, connections and fixing kit



Reference	Weight	€
SI02 0011 1100 001	5	•

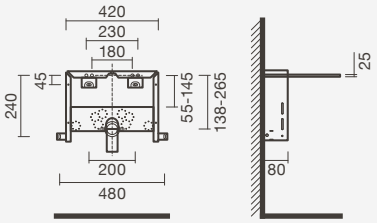

LCN ASSEMBLY SETS - WALL-MOUNTED TOILETS

LCN assembly set

520 × 30-80 × 735 mm

> wall-mounted application
> wall-in construction application (recessed)
> compatible with wall-mounted toilets and LCN flush plates
> structure in galvanized steel and cistern with insulation
> dual flush 3/6 litres
> in the box: assembly set, connections, shut-off valve and fixing kit



Reference	Weight	€
SI00 9637 9299 900	9	•

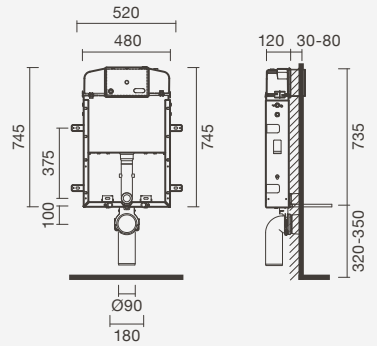

LCN ASSEMBLY SETS - FLOOR-STANDING TOILETS

LCN recessed cistern

510 × 120 × 835 mm

> wall-mounted application
> wall-in / drywall construction application (recessed)
> compatible with floor-standing, floor-standing BTW toilets and LCN flush plates
> cistern with insulation
> dual flush 3/6 litres
> in the box: assembly set, connections and fixing kit



Reference	Weight	€
SI00 9627 9199 900	3	•

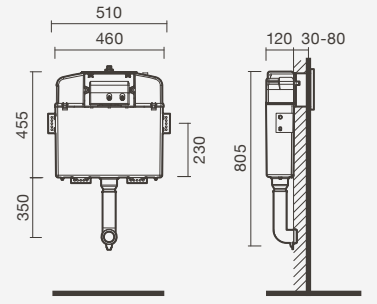

ASSEMBLY SET - SUPPORT RAIL INSTALLATION



Assembly set for support rail installation

296 × 135-205 × 1200 mm

> wall and floor-mounted application
> wall-in construction application (recessed)
> compatible with Sanitaryware assembly sets
> structure in thermo-lacquered steel
> reversible
> in the box: assembly set

Reference	Weight	€
TNR9 0000 0000 0095	17	•

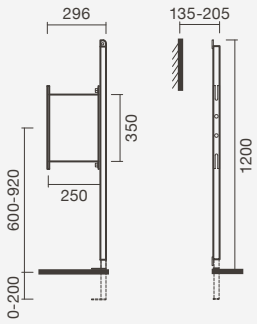

ACOUSTIC INSULATION PLATE

Acoustic insulation plate

> compatible with sanitaryware assembly sets
> in styrofoam
> in the box: acoustic insulation plate

Reference	Weight	€
TNR9 0000 0000 0096	1	•

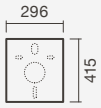



INSIDE recessed cistern with CORAL floor-standing BTW toilet, CORAL floor-standing BTW bidet and SUN bidet mixer

Water inlet and flushing systems



GLAM wall-mounted toilet with self-closing toilet flowmeter

Water inlet: mechanisms

FOR CERAMIC TOILET CISTERNS

NEW



Water inlet mechanism

> compatible with Coral, Glam, Be You, Nex, Pop Square, Pop Art, Loft, Regina, Munique, Cent and Mobil cisterns
> lower water inlet valve
> in the box: 12 units (admissible minimum order)

Reference	Weight	€	Unit €
SR10 0000 0002 043	1	•	•

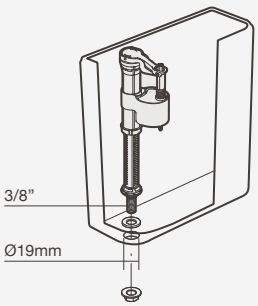

NEW



Water inlet mechanism

> compatible with Loft, Munique and Cent cisterns
> side water inlet valve
> in the box: 12 units (admissible minimum order)

Reference	Weight	€	Unit €
SR10 0000 0002 044	1	•	•

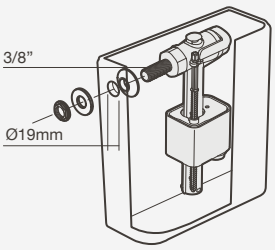

Water inlet mechanism

> compatible with Grecia cistern
> lower water inlet valve
> in the box: 6 units (admissible minimum order)

Reference	Weight	Set €	Unit €
S100 0206 3499 900	2	•	•

Water inlet: shut-off valves



Shut-off valve

> without filter
> square handle
> in chrome plated brass
> in the box: shut-off valve (1 unit)

Reference	Weight	€
TNR5 0000 0000 0169	1	•

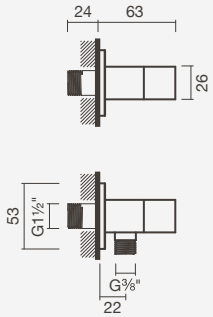



Shut-off valve

> without filter
> square handle
> in chrome plated brass
> in the box: shut-off valve (1 unit)

Reference	Weight	€
TNR5 0000 0000 0168	1	•

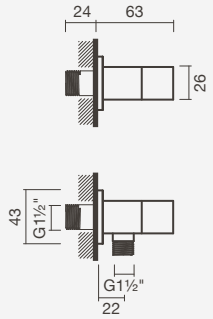



Shut-off valve

> with filter
> for the connection of monoblocks
> in chrome plated brass
> in the box: shut-off valves (2 units)

3/8	Weight	€
TNR5 0000 0000 167	1	•
1/2		
SR50 0000 0002 134	1	•

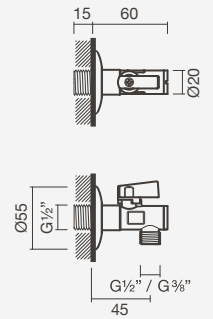





Shut-off valve

> without filter
> round handle
> in chrome or matte black plated brass
> in the box: shut-off valve (1 unit)

Chrome finish	Weight	€
TNR5 0000 0000 0170	1	•
Matte black finish		
S502 0524 8871 600	1	•

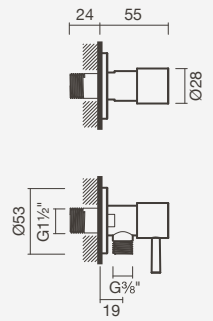

Water outlet: flushing mechanisms

FOR CERAMIC TOILET CISTERNS

NEW



Flushing mechanism

> compatible with Coral, Glam, Be You, Nex, Pop Square, Pop Art, Loft, Regina, Munique, Cent and Mobil cisterns
> valve with button (dual flush)
> in the box: 20 units (admissible minimum order)

Reference	Weight	Set €	Unit €
SR10 0000 0002 042	1	•	•

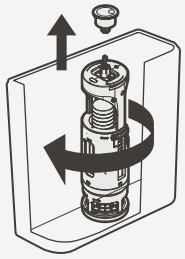

Flushing mechanism

> compatible with Grecia cistern
> valve with lever (single flush)
> in the box: 6 units (admissible minimum order)

Reference	Weight	Set €	Unit €
S100 0336 3999 900	1	•	•

Water outlet: flowmeters

FOR TOILETS



Self-closing toilet flowmeter

> wall-mounted application (exposed)
> compatible with floor-standing toilets
> pre-regulated to 3 bars - 6 litres per minute (flow adjustable from 4,5 to 26 litres per minute)
> with shut-off valve for maintenance
> 5 year warranty
> in the box: toilet flowmeter, connecting chrome pipe and fixing kit

Reference	Weight	€
S500 8752 6999 900	3	•

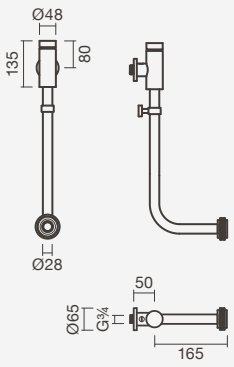

Self-closing toilet flowmeter

> wall-mounted application (concealed)
> compatible with floor-standing, BTW floor-standing and wall-mounted toilets
> pre-regulated to 3 bars - 6 litres per minute (flow adjustable from 1 to 22 litres per minute)
> with shut-off valve for maintenance
> 5 year warranty
> in the box: urinal flowmeter, embellishing chrome plate and fixing kit

Reference	Weight	€
S500 8762 9199 900	3	•



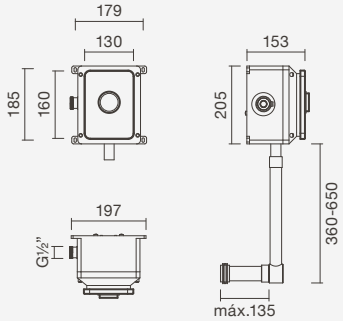

Water outlet: flowmeters

FOR URINALS



Electronic urinal flowmeter

> wall-mounted application (concealed)
> compatible with horizontal or vertical water inlet urinals
> with ecological flush (set for 1 liter of water, with possibility of adjustment for 1/2 liter of water)
> electronic sensor allows automated flush after each use (flush can also be activated manually)
> powered by electric transformer 100-240V (50-60Hz) or AA bateries (1.5V)
> in the box: install box, flowmeter with electronic sensor, transformer, connections and fixing kit

Reference	Weight	€
S502 0620 0012 600	3	•

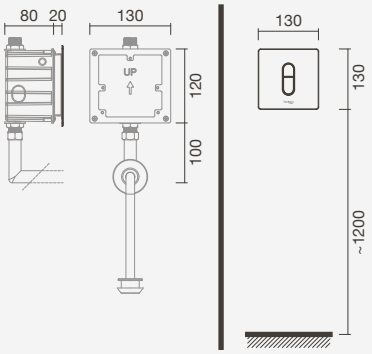



Self-closing urinal flowmeter

> wall-mounted application (exposed)
> compatible with vertical water inlet urinals
> pre-regulated to 3 bars - 2 litres per minute (flow adjustable from 1 to 22 litres per minute)
> with shut-off valve for maintenance
> 5 year warranty
> in the box: urinal flowmeter, connecting chrome pipe and fixing kit

Reference	Weight	€
S500 8772 7099 900	2	•

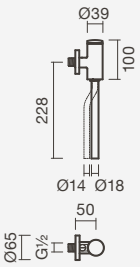



Self-closing urinal flowmeter

> wall-mounted application (concealed)
> compatible with horizontal water inlet urinals
> pre-regulated to 3 bars - 2 litres per minute (flow adjustable from 1 to 22 litres per minute)
> with shut-off valve for maintenance
> 5 year warranty
> in the box: urinal flowmeter, embellishing chrome plate and fixing kit

Reference	Weight	€
S500 8782 9299 900	2	•

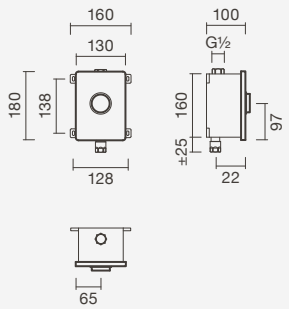

Water outlet: flushing plates

PLAN



Flush plate

> wall-mounted application (concealed)
> compatible with *inside* assembly sets
> with dual flush
> in the box: flush plate and fixing kit

White	Weight	€
SI02 0116 6500 000	1	•
Matte gray		
SI02 0116 6511 400	1	•
Chrome		
SI02 0116 6512 600	1	•
Matte black		
SI02 0116 6571 600	1	•

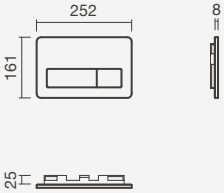

PLAN



Anti-vandalism flush plate

> wall-mounted application (concealed)
> compatible with *inside* assembly sets
> with dual flush
> in the box: flush plate and fixing kit

Brushed stainless steel	Weight	€
SI02 0116 6501 100	1	•

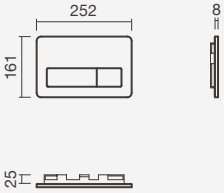

PLAN



Electronic flush plate

> wall-mounted application (concealed)
> compatible with *inside* assembly sets
> with dual flush
> hidden electronic sensor allows automated flush after each use (flush can also be activated manually)
> powered by electric transformer (230V)
> in the box: flush plate with electronic sensor and fixing kit

Brushed stainless steel	Weight	€
SI02 0120 0001 100	1	•

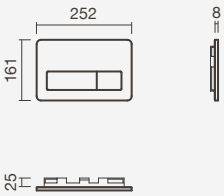

INSIDE



Electronic flush plate

> wall-mounted application (concealed)
> compatible with *inside* assembly sets
> with dual flush
> hidden electronic sensor allows automated flush after each use
> in the box: flush plate with electronic sensor and fixing kit

Glossy gray	Weight	€
SI02 0120 0000 001	1	•

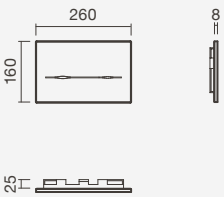

Water outlet: flushing plates

ARC





Flush plate

> wall-mounted application (concealed)
> compatible with *inside* assembly sets
> with dual flush
> in the box: flush plate and fixing kit

White	Weight	€
SI02 0096 6500 000	1	•
Matte gray		
SI02 0096 6511 400	1	•
Chrome		
SI02 0096 6512 600	1	•

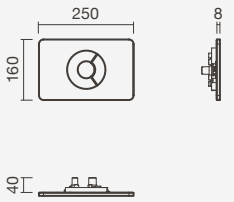

DOT





Flush plate

> wall-mounted application (concealed)
> compatible with *inside* assembly sets
> with dual flush
> in the box: flush plate and fixing kit

White	Weight	€
SI02 0106 6500 000	1	•
Matte gray		
SI02 0106 6511 400	1	•
Chrome		
SI02 0106 6512 600	1	•

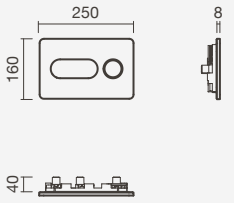

LCN





Flush plate

> wall-mounted application (concealed)
> compatible with LCN assembly sets
> with dual flush
> in the box: flush plate and fixing kit

White	Weight	€
SI00 8507 9400 000	1	•
Matte gray		
SI00 8507 9661 600	1	•
Chrome		
SI00 8507 9558 400	1	•

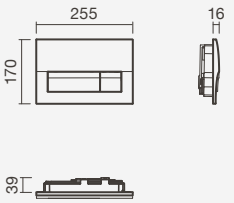

Water outlet: wastes

PUSH-OPEN



1 1/4" Outlet waste set

> for washbasins or bidets with overflow
> with push-open valve (stop & go)
> square or round outlet waste cover (removable)
> in chrome plated brass
> in the box: outlet waste set

Square outlet waste cover	Weight	€
TN50 0087 1619 9900	1	•
Round outlet waste cover		
TN50 0090 1639 9900	1	•



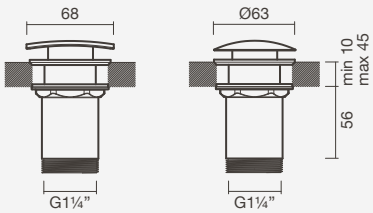



1 1/4" Outlet waste set

> for washbasins or bidets with overflow
> with push-open valve (stop & go)
> round outlet waste cover (removable)
> in chrome or matte black plated brass
> in the box: outlet waste set

Round outlet waste cover - chrome	Weight	€
TN50 0089 1629 9900	1	•
Round outlet waste cover - matte black		
S502 0540 0071 600	1	•



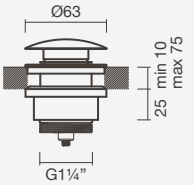

1 1/4" Outlet waste set

> for washbasins or bidets with overflow
> with push-open valve (stop & go)
> round outlet waste cover (removable)
> in chrome plated brass
> in the box: outlet waste set

Round outlet waste cover	Weight	€
TN50 0091 1639 9900	1	•



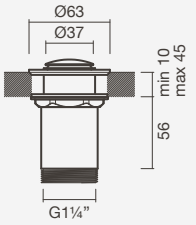

FREEFLOW



1 1/4" Outlet waste set

> for washbasins or bidets without overflow
> with non-closing valve (freeflow)
> round outlet waste cover (removable)
> in chrome plated brass
> in the box: outlet waste set

Round outlet waste cover	Weight	€
TN50 0088 3179 9900	1	•

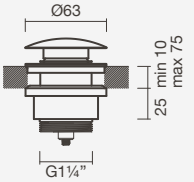

Water outlet: bottle traps

FOR WASHBASINS OR BIDETS



1 1/4" Bottle trap

> for washbasins or bidets
> square or round format
> in chrome plated brass or matte black
> in the box: bottle trap

Square format - chrome	Weight	€
TN50 0082 3199 9900	1	•
Round format - chrome		
TN50 0084 2139 9900	1	•
Round format - matte black		
S502 0511 4471 600	1	•

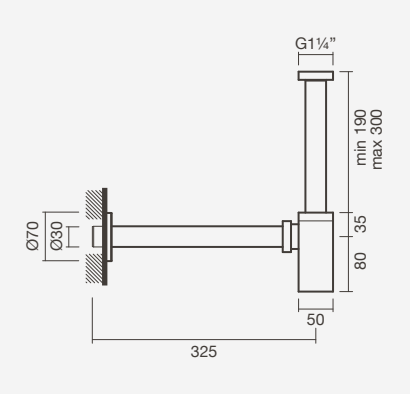





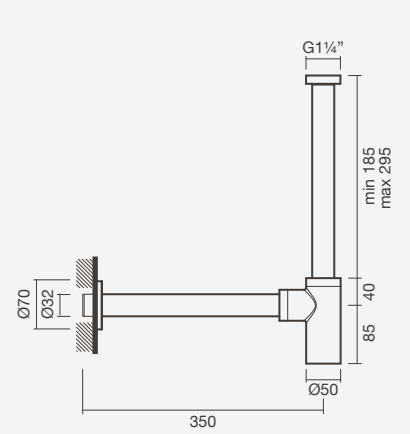

1 1/4" Bottle trap

> for washbasins or bidets
> round format
> in chrome plated brass
> in the box: bottle trap

Reference	Weight	€
TN50 0085 3219 9900	1	•



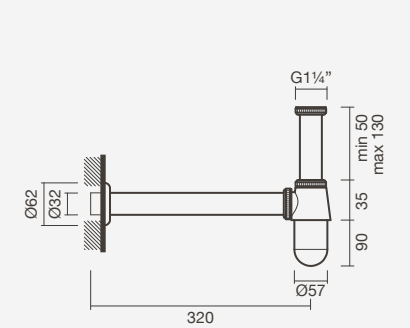

1 1/4" Bottle trap

> for washbasins or bidets
> round format
> in chrome plated brass
> in the box: bottle trap

Reference	Weight	€
TN50 0086 2149 9900	1	•



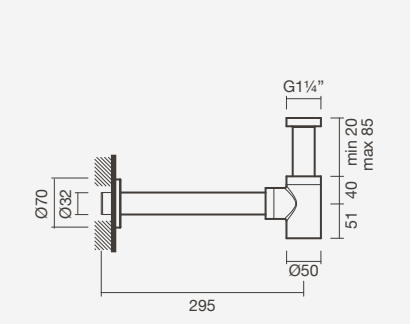

NEW



1 1/4” Bottle trap with outlet waste set

> for washbasins or bidets
> outlet waste with push-open valve (stop & go)
> in plastic
> in the box: bottle trap and outlet waste set

Reference	Weight	€
S502 1410 0012 600	1	•

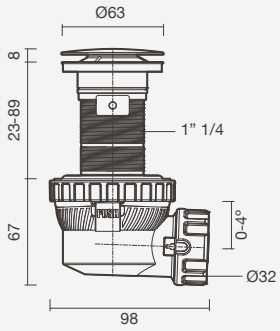



Round bottle trap in matte black with HALO square washbasin and SUN high spout washbasin mixer in matte black

Water outlet: connecting elements

ADAPTERS AND TUBES



Outlet adapter from Ø90mm to Ø110mm

> compatible with Sanitaryware assembly sets
> wall-in construction application (recessed)
> in polyethylene
> in the box: outlet adaptar

Reference	Weight	€
TNR9 0000 0000 0094	1	•



Connection tube Ø110mm (200mm)

> compatible with sanitaryware assembly sets
> wall-in construction application (recessed)
> in polyethylene
> in the box: connection tube

Reference	Weight	€
TNR9 0000 0000 0143	1	•

Hygiene accessories

HYGIENE SHOWERS

NEW



Hygiene shower set with built-in tap

> compatible with bidets or toilets
> 2 spray functions: rain or pulverization
> adjustable flow intensity
> in brass and plastic
> in the box: bidet shower set with built-in tap, shower hose and fixing kit

Reference	Weight	€
S502 1140 0012 600	1	•

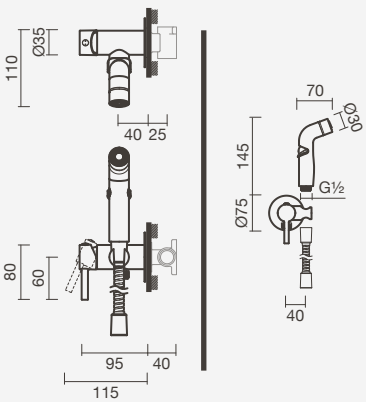



Hygiene shower set

> compatible with bidets or toilets
> 2 spray functions: rain or pulverization
> adjustable flow intensity
> in chromed abs
> in the box: handshower, handshower holder and shower hose

Reference	Weight	€
S500 9491 1399 900	1	•

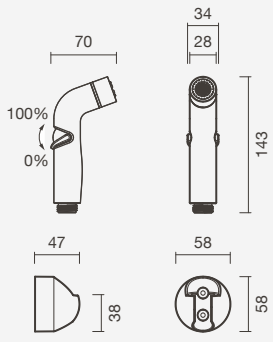



Hygiene shower set with built-in tap with LOFT floor-standing close-coupled toilet





Public spaces

Introduction

Information 106

Collective spaces

Urinals
- Electronic 108
- Vertical inlet 110
- Horizontal inlet 112

Children's bathrooms 114

Accessibility solutions

N Sanitaryware 116
WC accessories 120
Electronic faucets 126
Self-closing faucets 130
N Clinical faucets 135

Specific products

Slop hopper 136
Utility sink 136
Laundry sink 136

Public spaces

What to consider



Lavatories

Collective spaces

A space for all

The state of a public lavatory inadvertently becomes the face of a business. We offer an assortment of requirements – from hygiene to safety, to assure that all spaces leave a good impression on the guests.

Range

Urinals

Design and privacy

Page 108

Learn more about our urinal range and find the right solution for each commercial space. We offer a wide range of size and flush options and even a practical urinal divider.



Electronic urinals

Ideal for lavatories where hygiene and water saving are priority. The performance of our electronic urinals is incomparable. Its clever hidden flush system avoids any unnecessary use of water and minimizes the risk of vandalism.

Available in the collections:
Large · Capri



Urinal divider

The urinal divider grants some privacy when using a public lavatory. Made of ceramic sanitaryware with hidden fixings, its design has been developed to not look out of place next to our urinals.

Available in the collections:
+1

Requirements

Children's bathrooms

Kid friendly lavatories

Page 114

Lavatories in schools and kindergartens have special requirements that demand customised solutions. Cleanliness and safety are a huge focal point, but it´s important not to forget the role of playfulness can have when teaching children about good hygiene practices. Our INFANTIL sanitaryware collection was specially created for the younger ones: it is smaller in size to adapt to children´s height, which allows them to be more autonomous and offers the possibility to personalise each toilet with a white, pink, yellow or blue toilet seat cover.



Lavatories

Accessibility

Barrier-free lavatories

Page 116

A barrier-free lavatory is a challenge for those in charge of designing it. It is imperative to think about the future and abide rigorous requirements. Learn more about our broad collection of sanitaryware and accessories specially created to assure autonomy for everyone in the bathroom space.



Sanitaryware collections

The passing of time comes with inevitable limitations and mobility issues. This is the phase where a sanitaryware collection specially thought out for users with reduced mobility really allows one to remain autonomous. Our MOBIL collection includes a 48cm high floor-standing close-coupled toilet seat (about 10cm higher than a conventional compact toilet), that relieves the pressure on the knees and makes the process of sitting down and getting up again easier. Within this collection you can also find a wall-hung washbasin that is cupped on the front to facilitate the access of wheelchair users. It is also possible to install this washbasin on a tilting hydraulic support system, which allows each user to regulate the inclination to a comfortable position for their individual needs.

Available in these collections:
Mobil · Nex



WC Accessories

Our broad collection of wc accessories for users with reduced mobility – such as toilet and washbasin support bars, or even a tilting mirror – helps prevent accidents and allows a comfortable and independent use of the bathroom.



Faucets

When designing a public lavatory it is imperative to bear in mind all it's potential users. Users with reduced mobility benefit from medical lever or electronic faucets which provide a simple and convenient ease of use.

Available in these collections:
Unic · Viva

Urinals: electronic

LARGE



Urinal - H.I.

460 × 355 × 525 mm

> horizontal inlet and vertical outlet
> compatible with electronic sensor (not included)
> in the box: urinal, connections, outlet waste, bottle trap and fixing kit

Reference	Weight	Pieces per pallet	€
S100 7183 0800 000	25	18	•

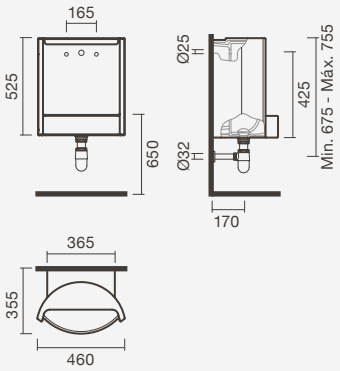

CAPRI





Urinal with built-in electronic sensor - H.I.

315 × 345 × 545 mm

> horizontal inlet and outlet
> with built-in electronic sensor
(H895 0710 0000 01 transformer not included)
> in the box: urinal, bottle trap and fixing kit

Reference	Weight	Pieces per pallet	€
H843 0700 0048 41	17	20	•

+ Transformer

> for hidden electronic flowmeter - 24V
> compatible with Large H.I. and Capri H.I. electronic urinals
> allows the use of up to three urinals simultaneously
> 5 year warranty
> in the box: transformer

H895 0710 0000 01	1	-	•

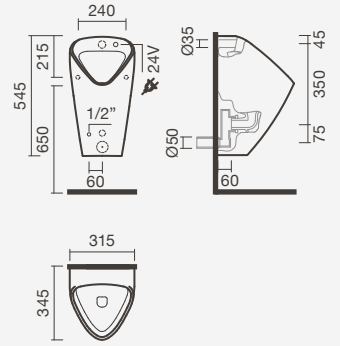

+ URINAL DIVIDER



Urinal divider

90 × 440 × 850 mm

> in the box: urinal divider and fixing kit

Reference	Weight	Pieces per pallet	€
S100 8305 7600 000	17	22	•

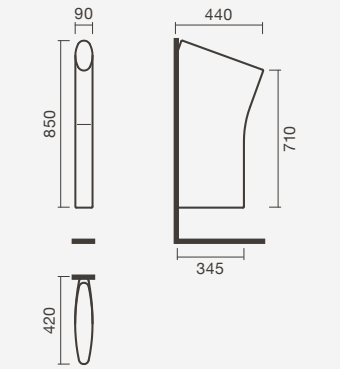

ELECTRONIC FLUSHING ACCESSORIES



Electronic urinal flowmeter

> wall-mounted application (concealed)
> compatible with horizontal or vertical water inlet urinals
> with ecological flush (set for 1 liter of water, with possibility of adjustment for 1/2 liter of water)
> electronic sensor allows automated flush after each use (flush can also be activated manually)
> powered by electric transformer 100-240V (50-60Hz) or AA bateries (1.5V)
> in the box: install box, flowmeter with electronic sensor, transformer, connections and fixing kit

Reference	Weight	€
S502 0620 0012 600	3	•

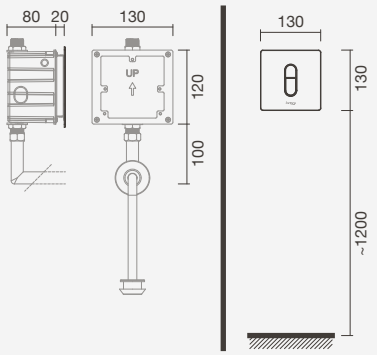



LARGE urinal with horizontal inlet and vertical outlet

Urinals: vertical water inlet

LARGE



Urinal - V.I.

460 × 355 × 525 mm

> vertical inlet and outlet
> in the box: urinal, connections, outlet waste, bottle trap and fixing kit

Reference	Weight	Pieces per pallet	€
S100 7173 0800 000	25	18	•

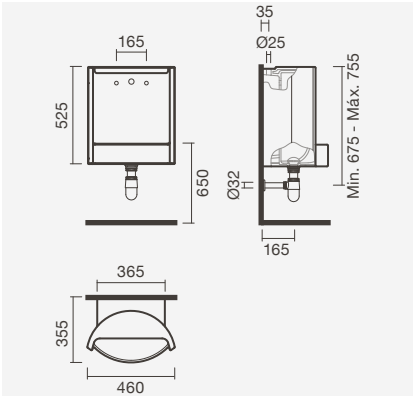

CAPRI



Urinal - V.I.

315 × 345 × 545 mm

> vertical inlet and horizontal outlet
> in the box: urinal, connections, bottle trap and fixing kit

Reference	Weight	Pieces per pallet	€
H843 0610 0042 31	16	20	•

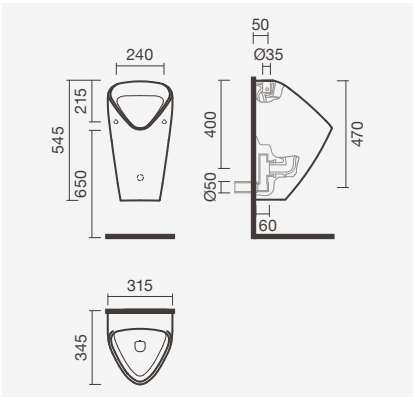

PIK



Urinal - V.I.

325 × 265 × 480 mm

> vertical inlet and outlet
> in the box: urinal, connections and fixing kit

Reference	Weight	Pieces per pallet	€
S100 7743 0600 000	10	25	•

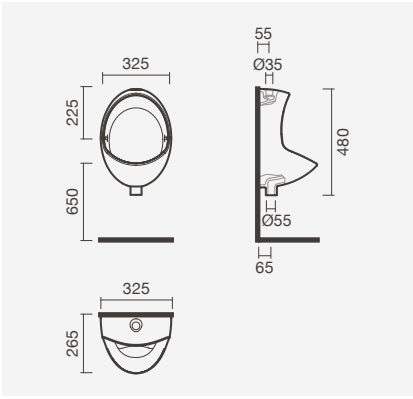

MINI



Urinal - V.I.

345 × 265 × 440 mm

> vertical inlet and outlet
> in the box: urinal, connections and fixing kit

Reference	Weight	Pieces per pallet	€
S100 7223 0600 000	9	50	•

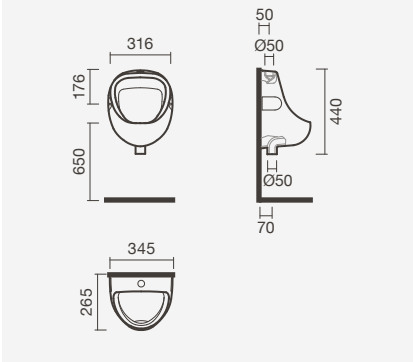

URINAL DIVIDER



Urinal divider

90 × 440 × 850 mm

> in the box: urinal divider and fixing kit

Reference	Weight	Pieces per pallet	€
S100 8305 7600 000	17	22	•

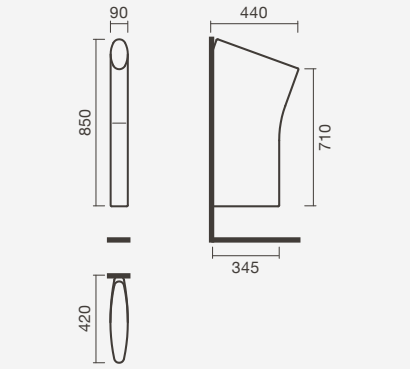

ELECTRONIC FLUSHING ACCESSORIES



Electronic urinal flowmeter

> wall-mounted application (concealed)
> compatible with horizontal or vertical water inlet urinals
> with ecological flush (set for 1 liter of water, with possibility of adjustment for 1/2 liter of water)
> electronic sensor allows automated flush after each use (flush can also be activated manually)
> powered by electric transformer 100-240V (50-60Hz) or AA bateries (1,5V)
> in the box: install box, flowmeter with electronic sensor, transformer, connections and fixing kit

Reference	Weight	€
S502 0620 0012 600	3	•

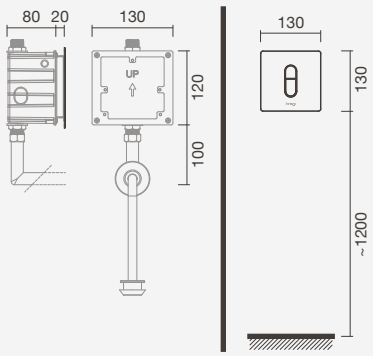

SELF-CLOSING FLUSHING ACCESSORIES



Self-closing urinal flowmeter

> wall-mounted application (exposed)
> compatible with vertical water inlet urinals
> pre-regulated to 3 bars - 1 liter per minute (flow adjustable from 1 to 22 liters per minute)
> with shut-off valve for maintenance
> 5 year warranty
> in the box: urinal flowmeter, connecting chrome pipe and fixing kit

Reference	Weight	€
S500 8772 7099 900	2	•

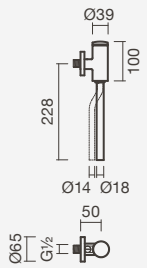

JANO self-closing flush valve



> wall-mounted application (exposed)
> compatible with vertical water inlet urinals
> flow time: 6 seconds (margin of error of 20%)
> water flow adjustable in order to compensate for higher pressures
> 5 year warranty
> in the box: self-closing flush valve

Reference	Weight	€
S500 0491 3450 710	1	•

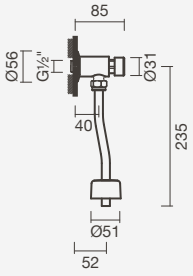

Urinals: horizontal water inlet

LARGE



Urinal - H.I.

460 × 355 × 525 mm

> horizontal inlet and vertical outlet
> in the box: urinal, connections, outlet waste, bottle trap and fixing kit

Reference	Weight	Pieces per pallet	€
S100 7183 0800 000	25	18	•

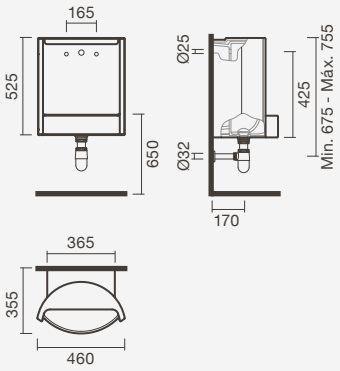

CAPRI



Urinal - H.I.

315 × 345 × 545 mm

> horizontal inlet and outlet
> in the box: urinal, connections, bottle trap and fixing kit

Reference	Weight	Pieces per pallet	€
H843 0600 0042 31	16	20	•

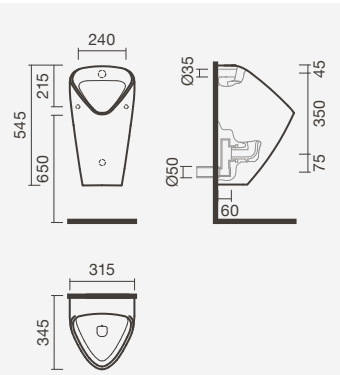

MAR



Urinal - H.I.

315 × 295 × 515 mm

> horizontal inlet and outlet
> in the box: urinal, connections, bottle trap and fixing kit

Reference	Weight	Pieces per pallet	€
S100 7213 0200 000	11	18	•

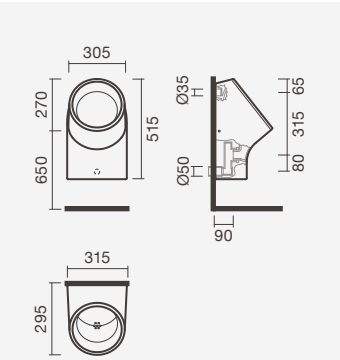

PIK



Urinal - H.I.

325 × 265 × 480 mm

> alimentação horizontal e escoamento vertical
> na embalagem: urinol, conexões de ligação e kit de fixação

Reference	Weight	Pieces per pallet	€
S100 7753 0600 000	10	25	•

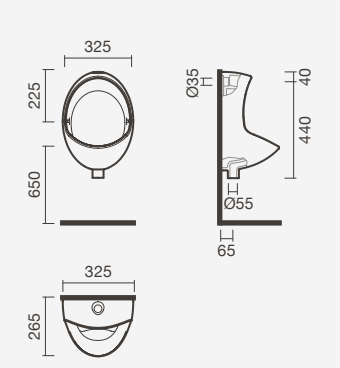

URINAL DIVIDERS



Urinal divider

90 × 440 × 850 mm

> in the box: urinal divider and fixing kit

Code	Weight	Pieces per pallet	€
S100 8305 7600 000	17	22	•

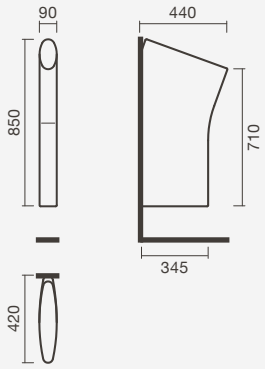

ELECTRONIC FLUSHING ACCESSORIES



Concealed electronic urinal flowmeter

> wall-mounted application (concealed)
> compatible with horizontal or vertical water inlet urinals
> with ecological flush (set for 1 liter of water, with possibility of adjustment for 1/2 liter of water)
> electronic sensor allows automated flush after each use (flush can also be activated manually)
> powered by electric transformer 100-240V (50-60Hz) or AA bateries (1,5V)
> in the box: install box, flowmeter with electronic sensor, transformer, connections and fixing kit

Reference	Weight	€
S502 0620 0012 600	3	•

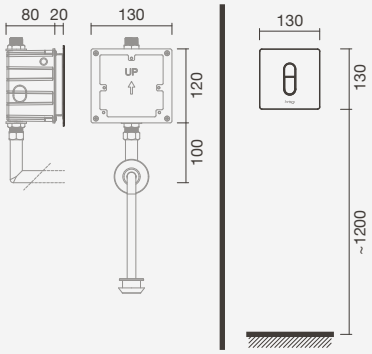

SELF-CLOSING FLUSHING ACCESSORIES



Self-closing urinal flowmeter

> wall-mounted application (concealed)
> compatible with horizontal water inlet urinals
> pre-regulated to 3 bars - 1 liter per minute (flow adjustable from 1 to 22 liters per minute)
> with shut-off valve for maintenance
> 5 year warranty
> in the box: urinal flowmeter, embellishing chrome plate and fixing kit

Reference	Weight	€
S500 8782 9299 900	2	•

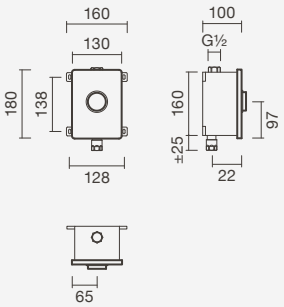

BLOOM self-closing flush valve

> wall-mounted application (concealed)
> compatible with horizontal water inlet urinals
> flow time: 6 secondes (margin of error of 20%)
> water flow adjustable in order to compensate for higher pressures
> 5 year warranty
> in the box: self-closing flush valve

Reference	Weight	€
S502 0770 1212 600	1	•



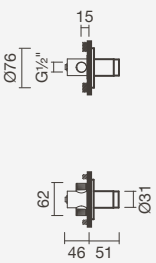

Children's bathrooms



INFANTIL BTW floor-standing toilets with blue and white seats and covers with NEX 56 under-counter recessed washbasins

INFANTIL



BTW Floor-standing toilet 42 D/O

265 × 415 × 335mm

> dual outlet
> in the box: toilet, bend connector and fixing kit

Reference	Weight	Pieces per pallet	€
S100 1312 3300 000	12	40	•

Toilet seats and covers

Wood - white			
S800 0733 2900 000	3	-	•
Wood - yellow			
S800 0733 2907 100	3	-	•
Wood - pink			
S800 0733 2907 500	3	-	•
Wood - blue			
S800 0733 2907 600	3	-	•

Toilet seats

Wood - white			
S800 0737 7300 000	2	-	•
Wood - yellow			
S800 0737 7307 100	2	-	•
Wood - pink			
S800 0737 7307 500	2	-	•
Wood - blue			
S800 0737 7307 600	2	-	•

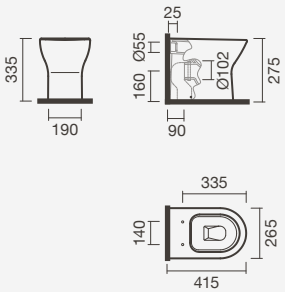

Complete set
Toilet + Seat •



Washbasin 56

560 × 470 × 185 mm

> recessed application (in countertop)
> with tap hole (central to bowl), with overflow
> in the box: washbasin

Reference	Weight	Pieces per pallet	€
S100 7481 6400 000	13	24	•

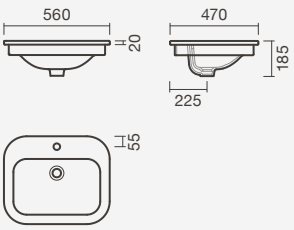



Washbasin 56

560 × 400 × 190 mm

> recessed application (in or under countertop)
> without tap hole, with overflow
> in the box: washbasin and fixing kit

Reference	Weight	Pieces per pallet	€
S100 7473 0500 000	10	24	•

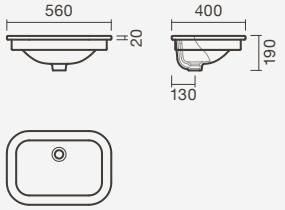

Sanitaryware



MOBIL floor-standing close-coupled toilet with folding support bars and bidet shower set

MOBIL

Floor-standing close-coupled toilet 69 D/O

425 × 690 × 885mm

> dual outlet
> in the box: toilet, bend connector and fixing kit

Reference	Weight	Pieces per pallet	€
H824 7160 0002 31	28	9	•

Toilet cistern

> dual flush 3/6 liters (mechanism assembled)
> button-activated flushing system (dual)
> in the box: toilet cistern and flushing mechanism

Lower water inlet			
H827 7130 0021 01	15	40	•

Toilet seat and cover

Thermodur (take-off system)			
S802 0036 2000 000	2	-	•



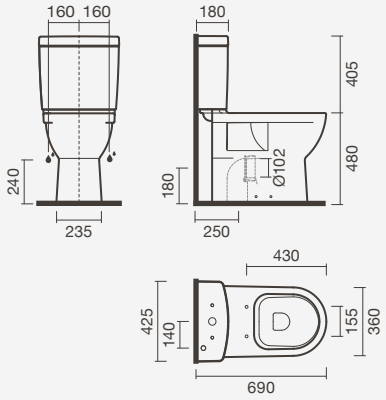

Complete set
Toilet + Cistern + Seat and Cover •

Washbasin 64

640 × 550 × 170mm

> wall-mounted application
> with tap hole (central), without overflow
> in the box: washbasin and fixing kit

Reference	Weight	Pieces per pallet	€
H813 7140 0009 51	20	18	•



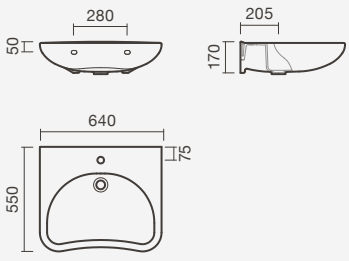

NEX

Floor-standing close-coupled toilet 67 D/O

375 × 665 × 790 mm

> dual oulet
> in the box: toilet, bend connector and fixing kit

Reference	Weight	Pieces per pallet	€
S100 7562 3300 000	24	15	•



Toilet cistern

> dual flush 3/6 litres (mechanism assembled)
> button-activated flushing system (dual)
> in the box: toilet cistern and flushing mechanism

Lower water inlet			
S102 0170 4500 000	14	30	•

Toilet seats and covers

Thermodur - open rim (comfort)			
S802 0130 0000 000	3	-	•

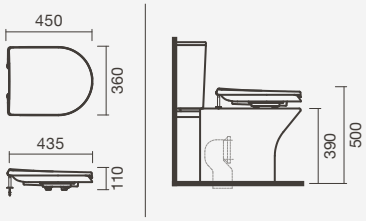

Complete set
Toilet + Cistern + Seat and cover •

Floor-standing close-coupled BTW toilet 61 D/O

380 × 610 × 755 mm

> dual oulet
> in the box: toilet, bend connector and fixing kit

Reference	Weight	Pieces per pallet	€
S100 7575 0300 002	25	15	•



Toilet cistern

> dual flush 3/4,5 litres (mechanism assembled)
> button-activated flushing system (dual)
> in the box: toilet cistern and flushing mechanism

Lower water inlet			
S102 0150 4500 000	13	30	•

Toilet seats and covers

Thermodur - open rim (comfort)			
S802 0130 0000 000	3	-	•

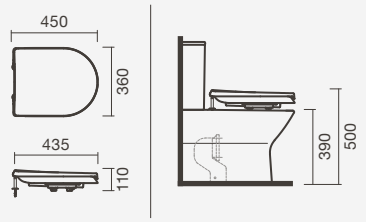

Complete set
Toilet + Cistern + Seat and cover •

NEX

Floor-standing BTW toilet 54 D/O

360 × 540 × 390 mm

> dual oulet
> in the box: toilet, bend connector and fixing kit

Reference	Weight	Pieces per pallet	€
S100 7582 3300 000	23	15	•

Toilet seats and covers

Thermodur - open rim (comfort)			
S802 0130 0000 000	3	-	•



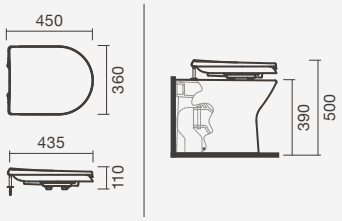

Complete set
Toilet + Seat and cover •

Wall-mounted toilet 54 H/O

360 × 535 × 405 mm

> horizontal outlet
> in the box: toilet and pre-installation kit

Reference	Weight	Pieces per pallet	€
S100 7591 8200 000	23	27	•

Toilet seats and covers

Thermodur - open rim (comfort)			
S802 0130 0000 000	3	-	•



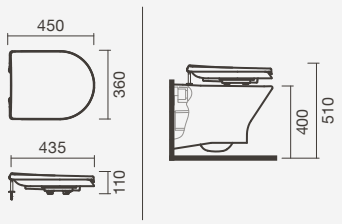

Complete set
Toilet + Seat and cover •

WC accessories



COLOURS

Brushed stainless steel

MATERIALS

Structure

Stainless steel (AISI 304)

MOBIL washbasin with hydraulic washbasin support system and fixed washbasin support bars, UNIC faucet and VEGA mirror

SUPPORT BARS

Washbasin support bar - fixed

> wall-mounted application
> in stainless steel with a brushed finish (AISI 304)
> 5 year warranty
> in the box: support bar and fixing kit



Left	Weight	Pieces per pallet	€
S900 1803 9801 100	2	36	•
Right			
S900 1803 9701 100	2	36	•



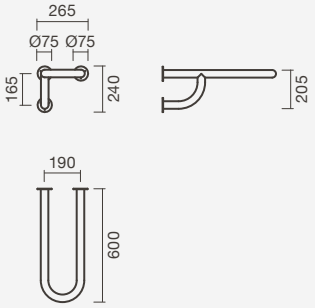

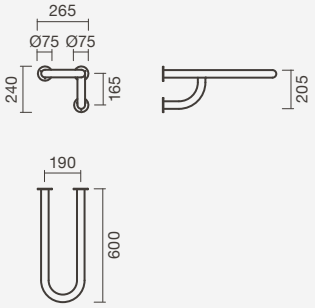

135° Angled support bar - fixed

> wall-mounted application
> in stainless steel with a brushed finish (AISI 304)
> 5 year warranty
> in the box: support bar and fixing kit



Reference	Weight	Pieces per pallet	€
S900 1772 7201 100	2	48	•

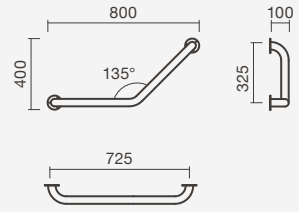

90° Angled support bar - fixed

> wall-mounted application
> in stainless steel with a brushed finish (AISI 304)
> 5 year warranty
> in the box: support bar and fixing kit



Reference	Weight	Pieces per pallet	€
S900 1762 7201 100	2	54	•

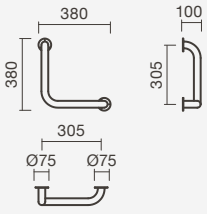

SUPPORT BARS





90° Angled support bar - fixed

> wall-mounted application
> in stainless steel with a brushed finish (AISI 304)
> 5 year warranty
> in the box: support bar and fixing kit

Left	Weight	Pieces per pallet	€
S900 1782 7301 100	1	36	•
Right			
S900 1782 7101 100	1	36	•

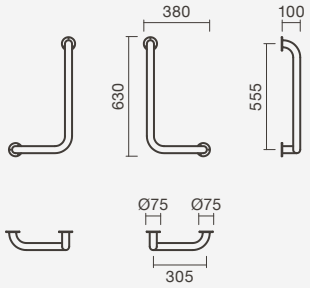





Curved toilet support bar - folding

> wall-mounted application
> in stainless steel with a brushed finish (AISI 304)
> 5 year warranty
> in the box: support bar and fixing kit

Left	Weight	Pieces per pallet	€
S900 1844 0201 100	3	36	•
Right			
S900 1843 9901 100	3	36	•

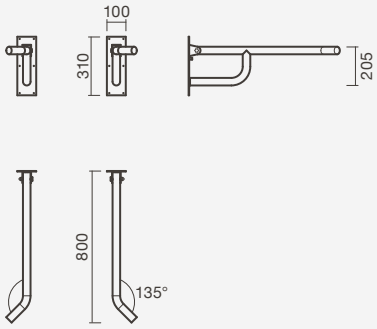

SUPPORT BARS

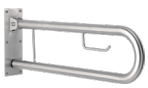

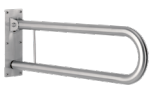

Toilet support bar - folding

> wall-mounted application
> in stainless steel with a brushed finish (AISI 304)
> 5 year warranty
> in the box: support bar and fixing kit

With toilet roll holder	Weight	Pieces per pallet	€
S900 1854 0101 100	3	36	•
Without toilet roll holder			
S900 1854 0001 100	3	36	•

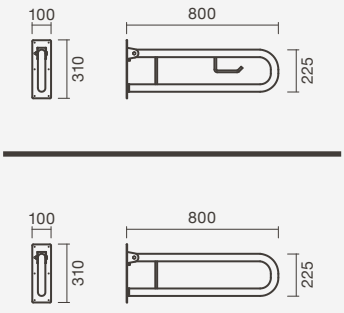

SUPPORT BARS



Toilet support bar - fixed

> wall-mounted application
> in stainless steel with a brushed finish (AISI 304)
> 5 year warranty
> in the box: support bar and fixing kit

Left	Weight	Pieces per pallet	€
S900 1834 0201 100	3	24	•
Right			
S900 1833 9901 100	3	24	•



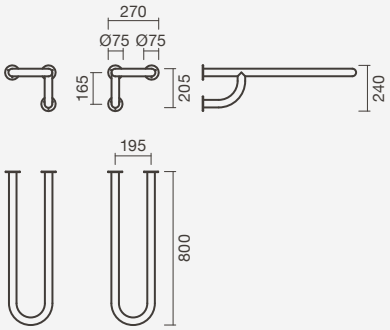

Toilet support bar - fixed

> wall and floor-mounted application
> in stainless steel with a brushed finish (AISI 304)
> 5 year warranty
> in the box: support bar and fixing kit

Left	Weight	Pieces per pallet	€
S900 1824 0201 100	3	9	•
Right			
S900 1823 9901 100	3	9	•



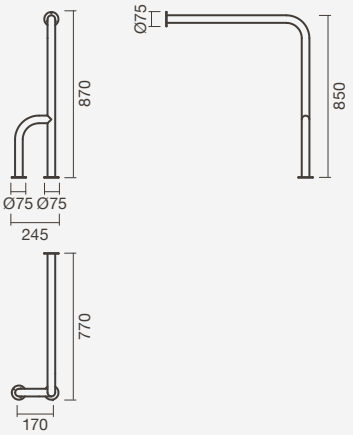



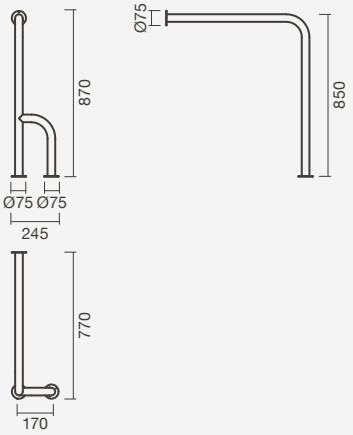

SUPPORT BARS



Support bar - fixed

> wall-mounted application
> in stainless steel with a brushed finish (AISI 304)
> 5 year warranty
> in the box: support bar and fixing kit

635 mm	Weight	€
S900 1817 7001 100	2	•
375 mm		
S900 1817 6801 100	2	•



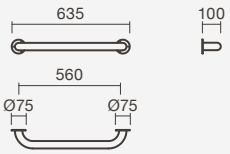

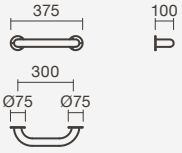

FOLDING SHOWER SEATS



Folding shower seat

455 × 505 × 270 mm

> wall-mounted application
> in stainless steel with a brushed finish (AISI 304)
> in the box: folding shower seat and fixing kit

Reference	Weight	€
S900 1792 7401 100	5	•

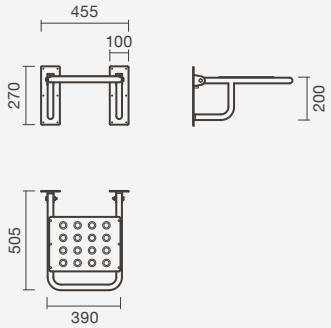

Folding shower seats

360 × 340 × 90 mm

> wall-mounted application
> in stainless steel and polyurethane
> in the box: folding shower seat and fixing kit

White	Weight	€
S900 1862 7500 000	5	•
Black		
S900 1862 7505 600	5	•



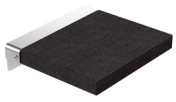

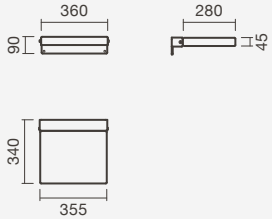

WASHBASIN SUPPORT SYSTEMS



Hydraulic washbasin support system - tilting

640 × 600 × 400 mm

> wall-mounted application
> in steel with white lacquered finish
> compatible with Mobil 64 washbasin
> 5 year warranty
> in the box: washbasin support system and fixing kit

Reference	Weight	€
S101 0553 9600 000	10	•

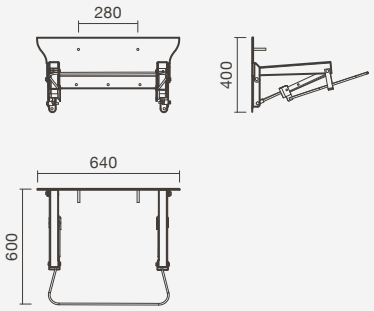



Hydraulic washbasin support system - tilting

640 × 600 × 400 mm

> wall-mounted application
> in stainless steel with a brushed finish (AISI 304)
> compatible with Mobil 64 washbasin
> 5 year warranty
> in the box: washbasin support system and fixing kit

Reference	Weight	€
S101 0563 9601 100	12	•

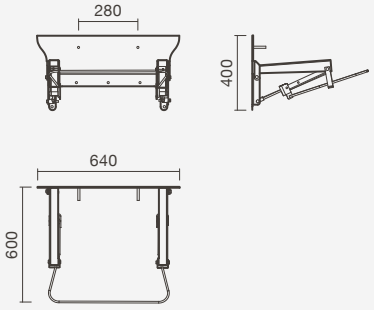



Washbasin support system - pre-adjustable

640 × 110 × 375 mm

> wall-mounted application
> in stainless steel with a brushed finish (AISI 304)
> compatible with Mobil 64 washbasin
> 5 year warranty
> in the box: washbasin support system and fixing kit

Reference	Weight	€
S101 0573 9601 100	8	•

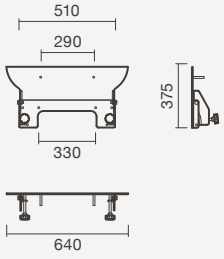

MIRROR - VEGA



Tilting mirror

600 × 145 × 800 mm

> stainless steel frame (with handle)
> vertical mounting
> in the box: mirror and fixing kit

Reference	Weight	€
S700 5680 8299 900	7	•

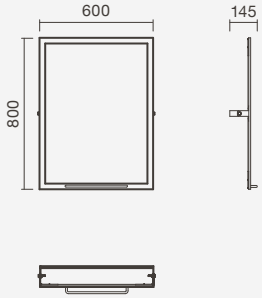

Faucets



SUN electronic washbasin faucet in gold finish

ELECTRONIC - SUN

Electronic washbasin faucet

> for washbasins with a tap hole
> with solenoid valve and non-orientable aerator (ecological)
> activated by an infrared sensor
> powered by electric power (230V) or batteries (6V)
> in the box: faucet, electronic box, flexible connections and fixing kit

One water inlet - chrome finish	Weight	€
S502 0960 0012 600	2	•
One water inlet - matt black finish		
S502 0960 0071 600	2	•
One water inlet - gold finish		
S502 0960 0071 700	2	•







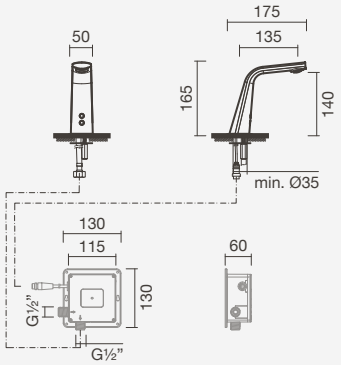

ELECTRONIC - BALANCE

Electronic washbasin faucet

> for washbasins with a tap hole
> with solenoid valve and non-orientable aerator (ecological)
> activated by an infrared sensor
> powered by electric power (220V) or batteries (1.5V)
> in the box: faucet, electronic box, hidden mixing device, flexible connections and fixing kit

Mixed water inlet	Weight	€
S500 0402 9350 703	1	•



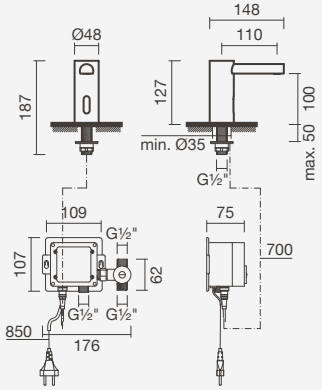

ELECTRONIC - BALANCE



Electronic washbasin faucet

> for washbasins without a tap hole
> with solenoid valve and non-orientable aerator (ecological)
> activated by an infrared sensor
> powered by electric power (220V) or batteries (1.5V)
> in the box: faucet, electronic box, hidden mixing device flexible connections and fixing kit

Mixed water inlet	Weight	€
S500 8952 9450 700	2	•

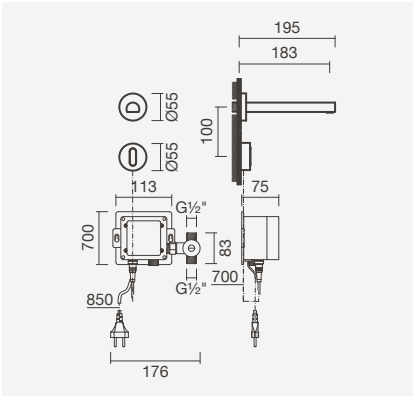



Electronic washbasin faucet

> for washbasins without a tap hole
> with solenoid valve and non-orientable aerator (ecological)
> activated by an infrared sensor
> powered by electric power (220V) or batteries (1.5V)
> in the box: faucet, electronic box, flexible connections and fixing kit

One water inlet	Weight	€
S500 8942 9350 700	2	•

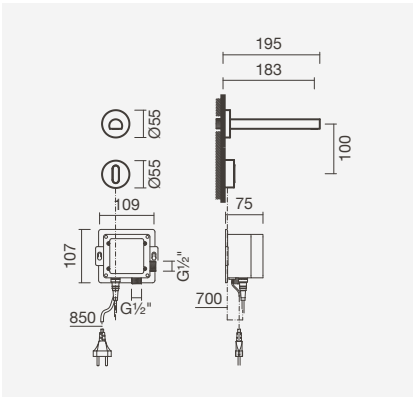



SUN electronic washbasin faucets in matt black finish and EVEN 160 wall-mounted washbasins in solid surface

ELECTRONIC - BALANCE



Electronic washbasin faucet

> for washbasins with a tap hole
> with solenoid valve and non-orientable aerator (ecological)
> activated by an infrared sensor
> powered by electric power (220V) or batteries (1.5V)
> in the box: faucet, electronic box, hidden mixing device, flexible connections and fixing kit

Mixed water inlet	Weight	€
S500 0592 9450 703	2	•

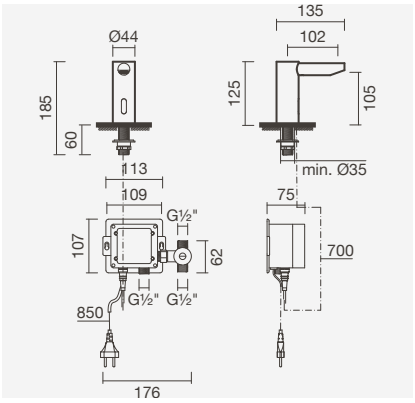



Electronic washbasin faucet

> for washbasins with a tap hole
> with solenoid valve and non-orientable aerator (ecological)
> activated by an infrared sensor
> powered by electric power (220V) or batteries (1.5V)
> in the box: faucet, electronic box, flexible connections and fixing kit

One water inlet	Weight	€
S500 0592 9350 703	2	•

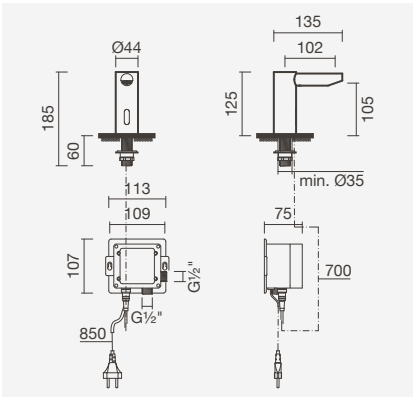



Electronic washbasin faucet

> for washbasins without a tap hole
> with solenoid valve and non-orientable aerator (ecological)
> activated by an infrared sensor
> powered by electric power (220V) or batteries (1.5V)
> in the box: faucet, electronic box, hidden mixing device, flexible connections and fixing kit

Mixed water inlet	Weight	€
S500 0592 9450 707	2	•

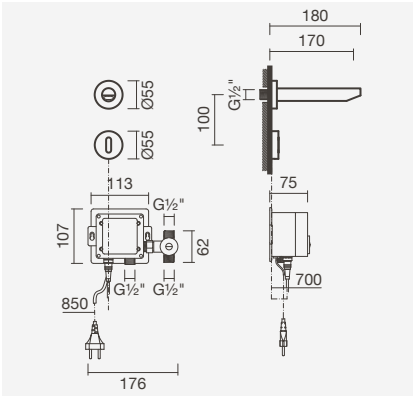



Electronic washbasin faucet

> for washbasins without a tap hole
> with solenoid valve and non-orientable aerator (ecological)
> activated by an infrared sensor
> powered by electric power (220V) or batteries (1.5V)
> in the box: faucet, electronic box, flexible connections and fixing kit

One water inlet	Weight	€
S500 0592 9350 707	2	•

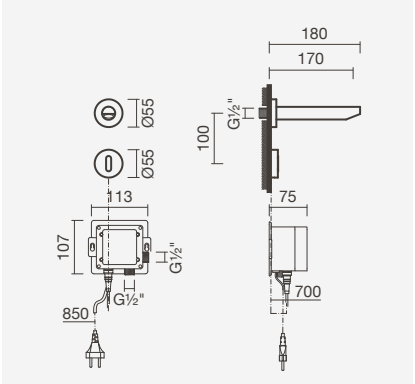

SELF-CLOSING - UNIC

Self-closing washbasin faucet

> for washbasins with a tap hole
> self-closing cartridge and non-orientable aerator (ecological)
> opening time: 6 seconds (margin of error of 20%)
> adjustable flow restrictor reduces water consumption
> in the box: faucet and fixing kit



Mixed water inlet	Weight	€
S500 0590 2650 703	2	•
One water inlet		
S500 0590 1250 703	1	•

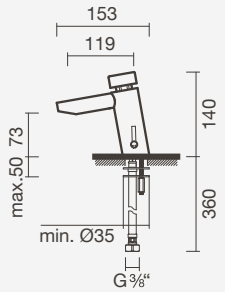



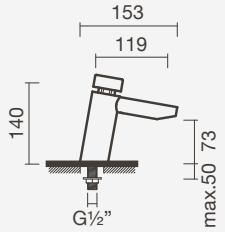

Self-closing washbasin faucet (high spout)

> for washbasins without a tap hole
> self-closing cartridge and non-orientable aerator (ecological)
> opening time: 6 seconds (margin of error of 20%)
> adjustable flow restrictor reduces water consumption
> in the box: faucet and fixing kit



Mixed water inlet	Weight	€
S500 0590 2750 711	3	•
One water inlet		
S500 0590 1550 711	2	•

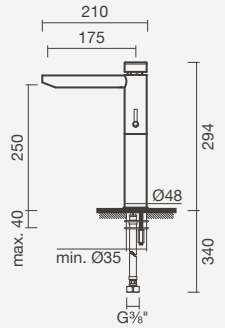



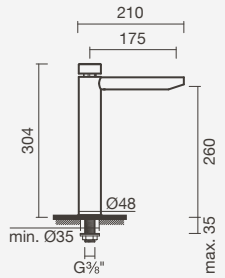

SELF-CLOSING - ECO-STOP

Self-closing washbasin faucet

> for washbasins with a tap hole
> self-closing cartridge and non-orientable aerator (ecological)
> opening time: 6 seconds (margin of error of 20%)
> adjustable flow restrictor reduces water consumption
> in the box: faucet



One water inlet	Weight	€
S500 0460 1250 703	1	•

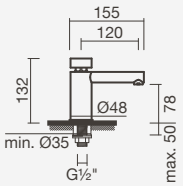



ECO-STOP self-closing washbasin faucet

SELF-CLOSING - BLOOM



Self-closing washbasin faucet

> for washbasins without a tap hole
> self-closing cartridge
> opening time: 6 seconds (margin of error of 20%)
> minimum installation depth: 90mm
> in the box: faucet, installation box, flexible connections and fixing kit

One water inlet	Weight	€
S502 0760 1212 600	3	•

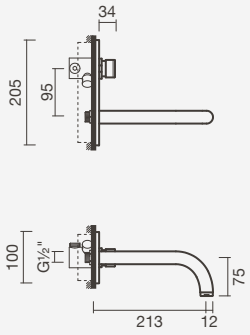

SELF-CLOSING - JANO



Self-closing washbasin faucet

> for washbasins with a tap hole
> self-closing cartridge and non-orientable aerator
> opening time: 6 seconds (margin of error of 20%)
> adjustable flow restrictor reduces water consumption
> in the box: faucet

One water inlet	Weight	€
S500 0490 1250 703	1	•

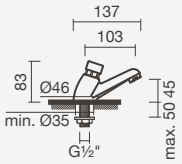

Self-closing washbasin faucets (spout)

> for washbasins without a tap hole
> self-closing cartridge and non-orientable aerator (ecological)
> opening time: 6 seconds (margin of error of 20%)
> adjustable flow restrictor reduces water consumption
> in the box: faucet



One water inlet - long spout	Weight	€
S500 0490 1450 703	1	•
One water inlet - short spout		
S500 0490 1350 703	1	•

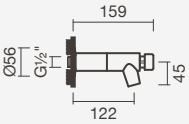



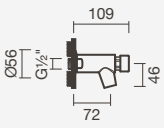

SELF-CLOSING - JANO



Self-closing shower faucet

> for showers
> self-closing cartridge
> opening time: 20 seconds (margin of error of 20%)
> adjustable flow restrictor reduces water consumption
> in the box: faucet

Mixed water inlet	Weight	€
S500 0490 2450 702	3	•
One water inlet		
S500 0490 0650 702	1	•

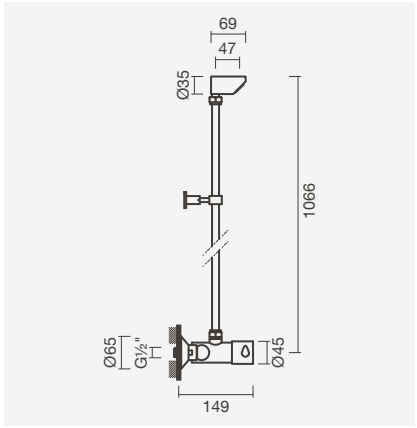



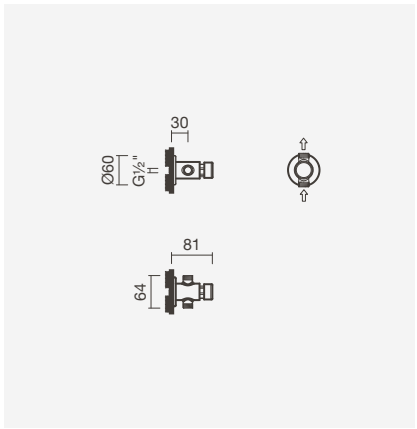

SELF-CLOSING - BLOOM



Self-closing shower faucet

> for showers
> self-closing cartridge
> opening time: 20 seconds (margin of error of 20%)
> adjustable installation depth:
  45 to 80mm (mixed water inlet) and 48 to 75mm (one water inlet)
> in the box: faucet

Mixed water inlet	Weight	€
S502 0760 2512 600	3	•
One water inlet		
S502 0760 0612 600	1	•

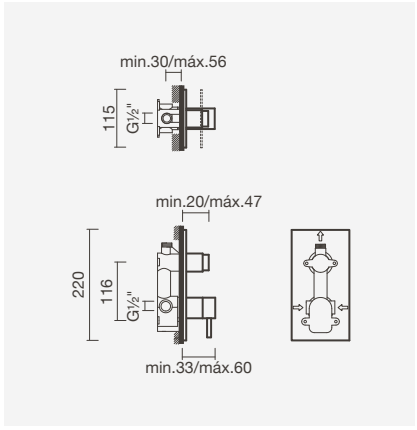



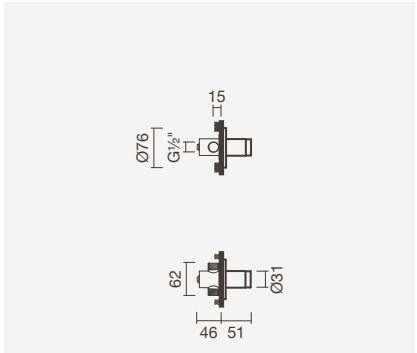

SELF-CLOSING - BLOOM



Self-closing urinal faucet

> for horizontal inlet urinals
> self-closing cartridge
> opening time: 6 seconds (margin of error of 20%)
> adjustable installation depth: 45 to 80mm
> in the box: faucet

One water inlet	Weight	€
S502 0770 1212 600	1	•

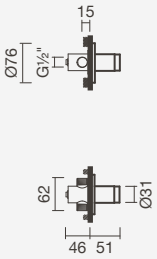

SELF-CLOSING - JANO



Self-closing urinal faucet

> for vertical inlet urinals
> self-closing cartridge
> opening time: 6 seconds (margin of error of 20%)
> adjustable flow restrictor reduces water consumption
> in the box: faucet

One water inlet	Weight	€
S500 0491 3450 710	1	•

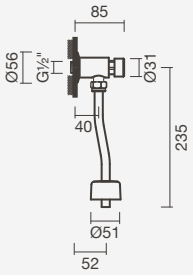



VITA single lever washbasin faucet with medical lever

UNIC



Medical lever washbasin faucet

> for washbasins with a tap hole
> ceramic cartridge (ecological) and orientable aerator (ecological)
> in the box: faucet, flexible connections and fixing kit

Reference	Weight	€
S500 0591 3150 703	1	•

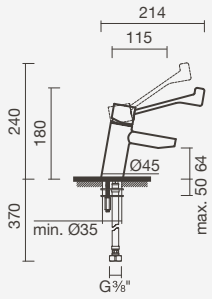

VIVA

NEW



Medical lever washbasin faucet

> for washbasins with a tap hole
> ceramic cartridge and non-orientable aerator
> cold start function
> in the box: faucet, flexible connections and fixing kit

Reference	Weight	€
S502 0245 0212 601	1	•

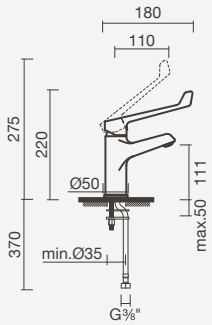

NEW

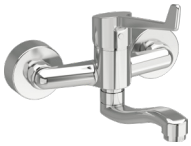

Medical lever wall-mounted faucet

> for slop hopper, utility sink, laundry sink or washbasins without tap hole
> ceramic cartridge and non-orientable aerator
> in the box: faucet, flexible connections and fixing kit

Reference	Weight	€
S502 1033 5812 600	2	•

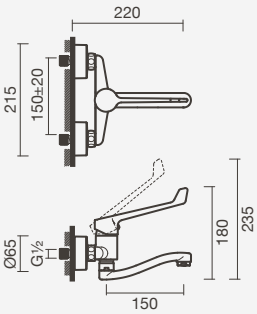

NEW



Medical lever shower faucet

> for shower
> ceramic cartridge (ecological)
> in the box: faucet, hand shower, shower holder, 150cm shower hose and fixing kit

Reference	Weight	€
S502 0301 3912 601	2	•

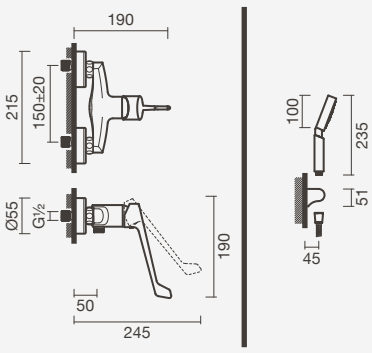

Specific products



Utility sink with VIVA wall-mounted faucet with clinical lever

SLOP HOPPERS



Slop hopper H/O

430 × 505 × 460mm

> horizontal outlet
> in the box: slop hopper, plastic grid and fixing kit

Reference	Weight	Pieces per pallet	€
H851 0460 0042 31	19	12	•

Hinged plastic grid for slop hopper

> application on slop hopper
> in the box: plastic grid

H895 0490 0000 01	1	-	•

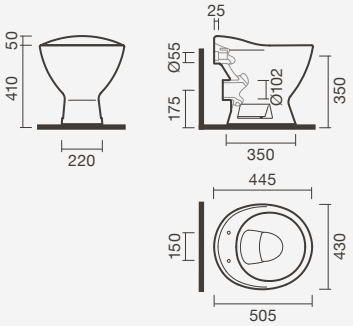

UTILITY SINKS



Utility sink

595 × 450 × 270mm

> recessed application (in countertop)
> in the box: utility sink

Reference	Weight	Pieces per pallet	€
H851 0290 0042 31	22	12	•

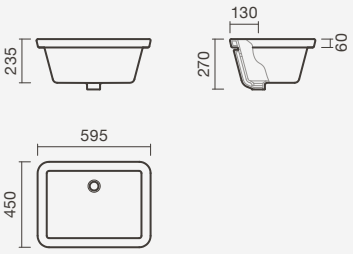

LAUNDRY SINKS



Laundry sink

390 × 600 × 360mm

> recessed application (in countertop)
> in the box: laundry sink

Reference	Weight	Pieces per pallet	€
S101 0012 5200 000	26	6	•

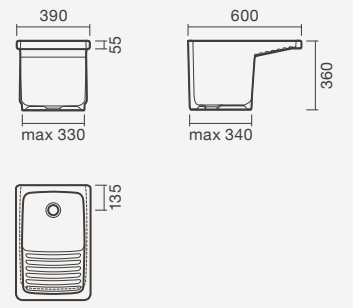





Washbasins

Introduction

Information	140
Model guide	142

Solid surface washbasins

Countertop	150
Wall-mounted	152
Recessed	168

Ceramic washbasins

N Countertop	178
Countertop / wall-mounted	186
N Wall-mounted	190
N Recessed	200

Washbasins

Find your ideal washbasin

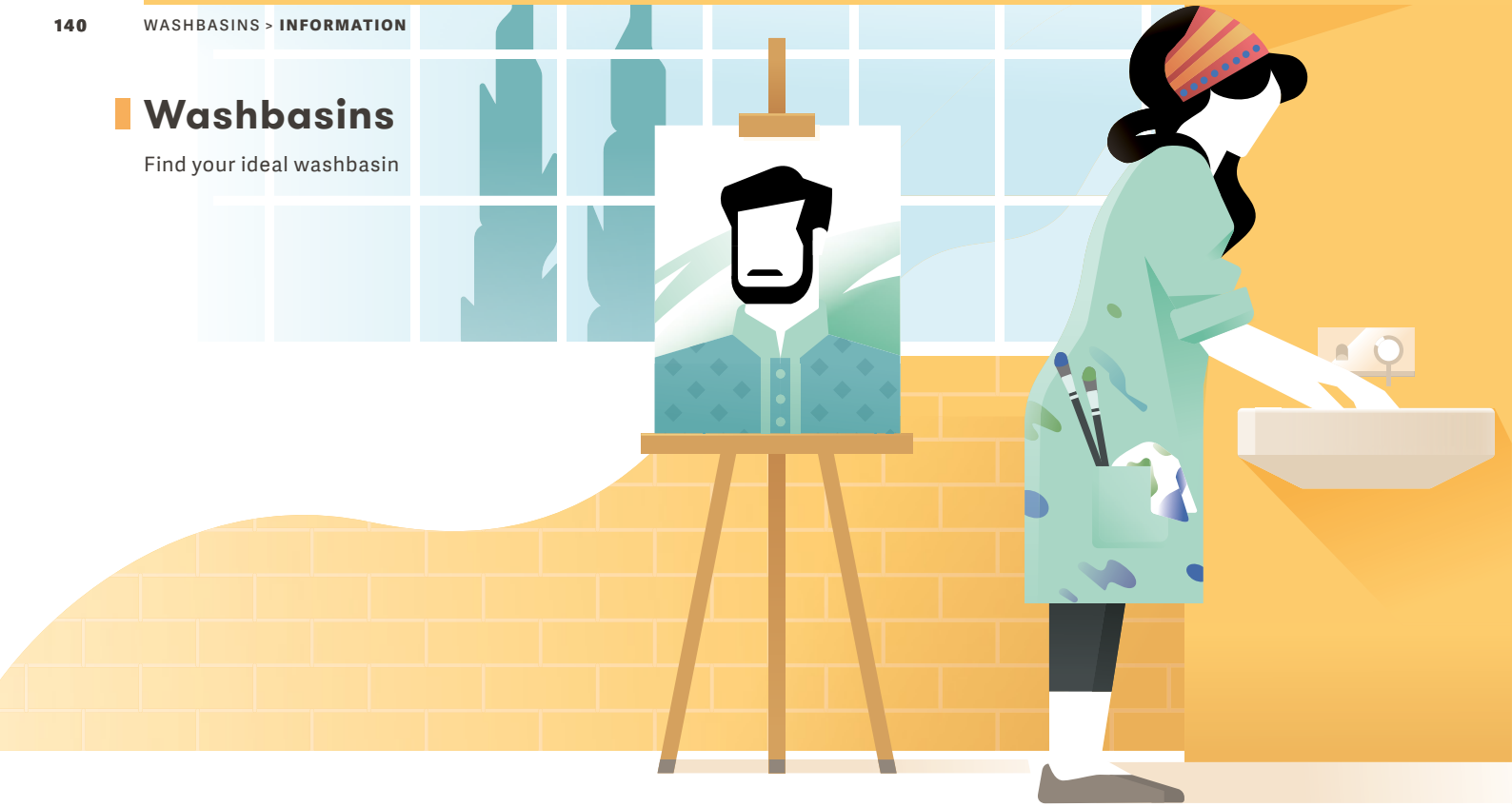

Washbasins

Purpose & design

Projects with no limitations

The washbasin has a crucial role in our daily routines from dawn to dusk, so its purpose and design are a priority for us. We have a broad variety of models, materials, designs and applications in our collection that allow you to truly create a bathroom that truly fits your project.

Materials

Solid surface

High quality at the service of design

Page 150

Solid surface is a composite material made of polyester resin with alumina powder, particularly well known for its softness, resistance and its non-porous and naturally antibacterial surface.

Touch

Solid surface has a soft, smooth and confortable to touch texture - similar to the feel of natural stone - with a matte finish.

Hygiene

Our solid surface is distinctively hygienic – compact and non-porous – preventing any bacteria or fungus from growing and spreading.

Cleaning

Common stains or superficial burns can be removed, maintaining its original appearance, as long as the instructions are followed.

Resistance

Solid surface remains unaltered under natural and artificial light. It is also highly resistant to most chemicals in cleaning products.

Materials

Sanitaryware

Efficiency and durability

Page 178

Sanitary ceramics have been used in bathrooms for centuries – and rightly so. The clear advantages of this material lie on it being produced from natural raw materials like clay, kaolin, feldspar and quartz. The hygiene of its vitrified surface grants comfort and safety, while its durability warrants a relatively long product life. Our ceramic washbasins have a particularly soft and impermeable texture – highly resistant to stains – so water spots, residual grease or soap residue can easily be removed.

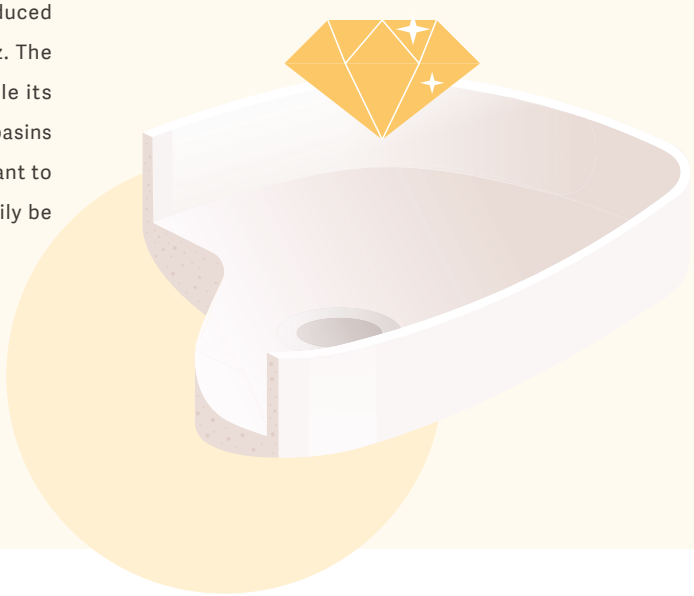

Application

Typologies

Find out which type suits your needs

Picking a washbasin requires the consideration of several variables, either structural (such as the piping positioning) or functional. Learn more about the different types of installation typologies and pick the best option for your project.

Countertop

Countertop washbasins rest chosen on the surface, allowing the shape and design of the washbasin to be the protagonist. Available in versions with or without tap hole, our countertop washbasins are usually glazed all around - enabling the positioning of the washbasin away from a wall.

Page 150 Page 178

Countertop / Wall-mounted

As the name suggests, the countertop / wall hung wash basins allow both types of installation. They can simply be placed on a countertop or wall-mounted - the better option for small bathrooms. These are ideal for anyone looking for more flexibility when ordering, since this alternative lets you keep your options open.

Page 186

Wall-mounted

The classic wall-hung washbasins are ideal for smaller bathrooms or for bathrooms that don't require a storage space. These can be separately installed on their own or, with their respective pedestals and siphon-covers, usually used in a way to hide the unsightly piping system.

Page 152 Page 190

Recessed

Recessed washbasins can be installed in three different ways: built in from above, from under the surface or semi-recessed. This type of washbasins is particularly useful for those who prefer to have more space for their toiletries or for those that prefer a clean and unfussy countertop.

Page 168 Page 200

Model guide

Discover our solid surface range of washbasins

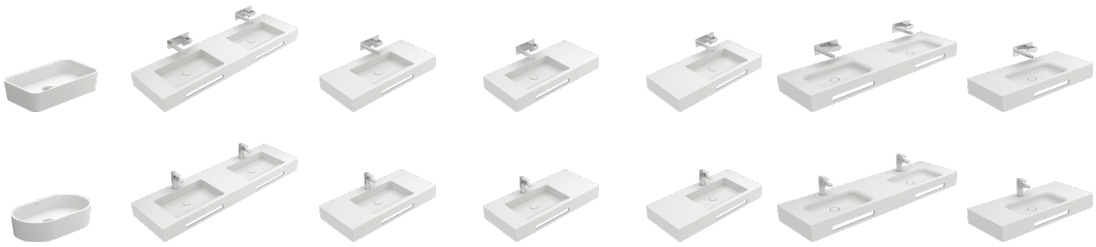

LENGTH	**Helm** Countertop	**Even** Wall-mounted	**Even** Wall-mounted	**Even** Wall-mounted	**Even** Wall-mounted	**Velvet** Wall-mounted	**Velvet** Wall-mounted
	Page 151	Page 153	Page 154	Page 156	Page 157	Page 159	Page 160
1600		1600 x 460				1600 x 460	
1500							
1400			1400 x 460	1400 x 460	1400 x 460		1400 x 460
1300							
1200			1200 x 460	1200 x 460	1200 x 460		1200 x 460
1100							
1000			1000 x 460	1000 x 460	1000 x 460		1000 x 460
900			900 x 460				900 x 460
800			800 x 460				800 x 460
700							
600							600 x 460
500	470 x 275						

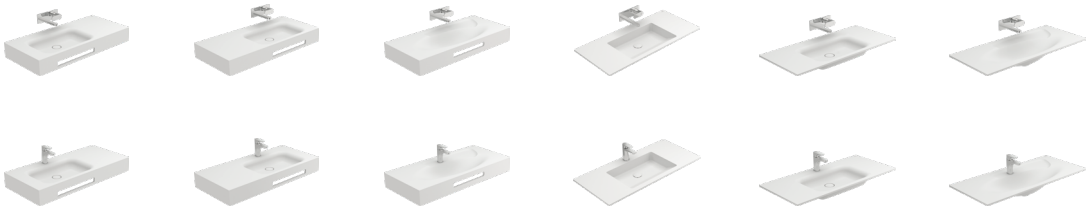

LENGTH	**Velvet** Wall-mounted	**Velvet** Wall-mounted	**Sleek** Wall-mounted	**Even** Recessed	**Velvet** Recessed	**Sleek** Recessed
	Page 162	Page 163	Page 165	Page 169	Page 173	Page 176
1600						
1500						
1400	1400 x 460	1400 x 460				
1300						
1200	1200 x 460	1200 x 460		1200 x 460	1200 x 460	
1100						
1000	1000 x 460	1000 x 460	1000 x 460	1000 x 460	1000 x 460	1000 x 460
900			900 x 460	900 x 460	900 x 460	900 x 460
800			800 x 460	800 x 460	800 x 460	800 x 460
700						
600			600 x 460		600 x 460	600 x 460
500						

Model guide

Discover our solid surface range of washbasins

LENGTH	 **Halo** Countertop Page 179	 **Arena** Countertop Page 180	 **Trik** Countertop Page 180	 **Orbit** Countertop Page 181	 **Elipse** Countertop Page 181	 **Albus** Countertop Page 181	 **Urban** Countertop Page 184
1200							
1000						1010 x 455	
800						810 x 455	
750			730 x 440				
700		700 x 380					
650					630 x 430		
600	600 x 380					610 x 455 605 x 455	
550							
500							
450				440 x 500			
400	380 x 380	380 x 380				450 x 450	450 x 450
350							

C / W * = Countertop / Wall-mounted

LENGTH

	 **Cup** Countertop Page 185	 **Be You** Countertop Page 185	 **Loft** Countertop Page 185	 **Cubic** C / W Page 187	 **City** C / W Page 187	 **Albus** C / W Page 187	 **Pop Art** C / W Page 188
1200							
1000							
800				795 x 345			
750							
700							
650							
600		600 x 430	600 x 490	595 x 340			620 x 485
550		550 x 430	550 x 490				570 x 485
500				500 x 345	480 x 480		505 x 440
450							
400	410 x 350	400 x 430				400 x 230	400 x 350
350							

C / W * = Countertop / Wall-mounted

Model guide

Discover our ceramic range of washbasins



Albus
Wall-mounted

Page 191



Isla
Wall-mounted

Page 193



Shape
Wall-mounted

Page 193



Drop
Wall-mounted

Page 193



Be You
Wall-mounted

Page 194



Loft
Wall-mounted

Page 195



Mobil
Wall-mounted

Page 196

LENGTH	Albus	Isla	Shape	Drop	Be You	Loft	Mobil
1200							
1000	1010 x 455						
800	810 x 455						
750							
700				700 x 350			
650							640 x 550
600	610 x 455				600 x 430	600 x 490	
550			530 x 485		550 x 430	550 x 490	
500							
450	450 x 450						
400		395 x 505			400 x 430 420 x 460	400 x 400	
350							



Munique
Wall-mounted

Page 197



Cent
Wall-mounted

Page 198



Grecia
Wall-mounted

Page 199



Regina
Wall-mounted

Page 199



Alur
Recessed

Page 201



Albus
Recessed

Page 201



Ovalo
Recessed

Page 202

LENGTH

1200					1210 x 460		
1000					1010 x 460		
800					810 x 460		
750			730 x 610				
700					710 x 460		
650			645 x 565				635 x 390
600	600 x 470	600 x 400		605 x 490	610 x 460		
550	550 x 435	550 x 400					
500		500 x 400					
450	465 x 360	450 x 400				450 x 475	
400							
350	350 x 225						

Model guide

Discover our ceramic range of washbasins

LENGTH	 **Circle** Recessed Page 202	 **Be You** Recessed Page 202	 **Aida** Recessed Page 203	 **Nex** Recessed Page 204	 **Grecia** Recessed Page 204	 **Luso** Recessed Page 205	 **Anadia** Recessed Page 205
1200							
1000							
900							
800							
750							
700		630 x 400					
650		600 x 460 600 x 350			575 x 480		
600			545 x 430	560 x 470 560 x 400		565 x 480	
550		500 x 460 500 x 350					535 x 400
500							
450	395 x 395						
400							



Jara

Recessed

Page 205

LENGTH

1200	
1000	
900	
800	
750	
700	
650	
600	
550	
500	
450	
400	395 x 395

Countertop washbasins



HELM *Square* solid surface countertop washbasin with NORM high spout single lever washbasin faucet

HELM - SQUARE

Washbasin 47

470 × 275 × 100mm

> countertop application
> without tap hole, without overflow
> in the box: washbasin

Reference	Weight	Pieces per pallet	€
S202 0830 0000 000	5	1	•



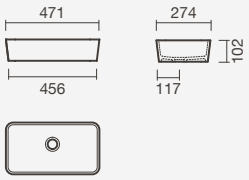

HELM - ROUND

Washbasin 47

470 × 275 × 100mm

> countertop application
> without tap hole, without overflow
> in the box: washbasin

Reference	Weight	Pieces per pallet	€
S202 0840 0000 000	5	1	•



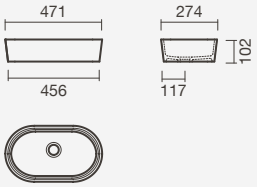

Wall-mounted washbasins



EVEN 100 *solid surface* wall-mounted washbasin With towel rail, SUN washbasin mixer and POLARIS mirror

EVEN - TWO BOWLS with tap holes



Washbasins 160

1600 × 460 × 125mm

> wall-mounted application - profile: 125mm
> with tap holes (central to the bowls), without overflows
> in the box: washbasin and fixing kit

With towel rail	Weight	Pieces per pallet	€
S202 0901 2000 000	23	1	•
Without towel rail			
S202 0901 1700 000	23	1	•



Shelf

> wall-mounted application
> in solid surface
> in the box: shelf and fixing kit

1600 x 385 x 50 mm			
S202 1250 0000 000	14	5	•



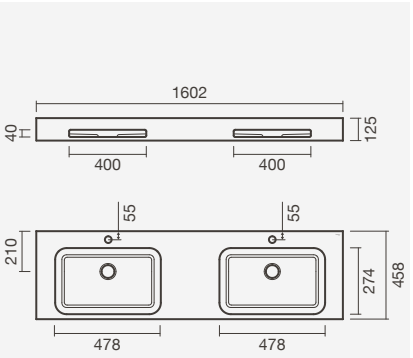

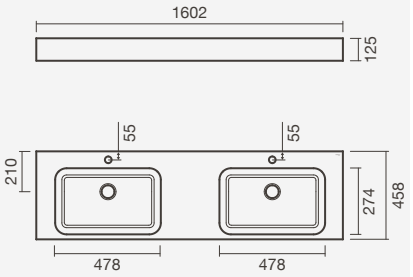

EVEN - TWO BOWLS without tap holes

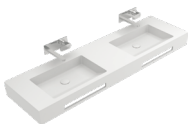

Washbasins 160

1600 × 460 × 125mm

> wall-mounted application - profile: 125mm
> without tap holes, without overflows
> in the box: washbasin and fixing kit

With towel rail	Weight	Pieces per pallet	€
S202 0901 1900 000	23	1	•
Without towel rail			
S202 0900 0000 000	23	1	•



Shelf

> wall-mounted application
> in solid surface
> in the box: shelf and fixing kit

1600 x 385 x 50 mm			
S202 1250 0000 000	14	5	•



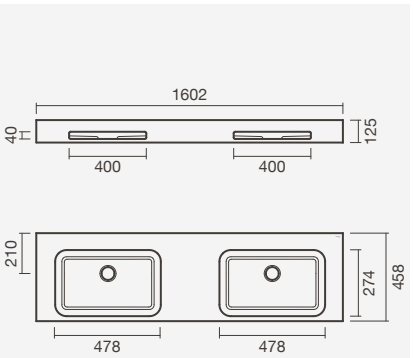

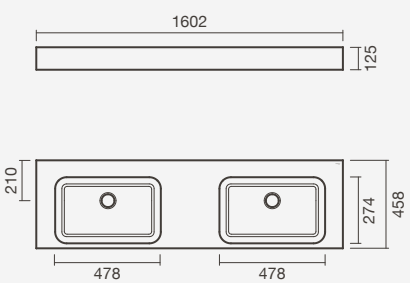

EVEN - CENTRAL BOWL with tap hole

















Washbasins 140, 120, 100, 90 and 80

> wall-mounted application - profile: 125mm
> with tap hole (central to bowl), without overflow
> in the box: washbasin and fixing kit

1400 x 460 mm - with towel rail	Weight	Pieces per pallet	€
S202 0911 2000 000	19	1	•
1400 x 460 mm - without towel rail			
S202 0911 1700 000	19	1	•
1200 x 460 mm - with towel rail			
S202 0941 2000 000	17	1	•
1200 x 460 mm - without towel rail			
S202 0941 1700 000	17	1	•
1000 x 460 mm - with towel rail			
S202 0971 2000 000	15	1	•
1000 x 460 mm - without towel rail			
S202 0971 1700 000	15	1	•
900 x 460 mm - with towel rail			
S202 1001 2000 000	14	1	•
900 x 460 mm - without towel rail			
S202 1001 1700 000	14	1	•
800 x 460 mm - with towel rail			
S202 1011 2000 000	13	1	•
800 x 460 mm - without towel rail			
S202 1011 1700 000	13	1	•

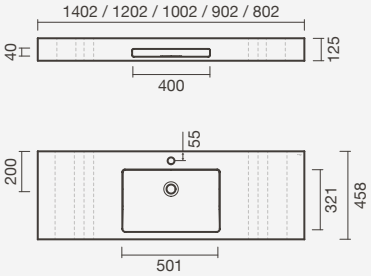

Shelf

> wall-mounted application
> in solid surface
> in the box: shelf and fixing kit

		Weight	Pieces per pallet	€
N	**1400 x 385 x 50 mm**			
	S202 1240 0000 000	12	5	•
N	**1200 x 385 x 50 mm**			
	S202 1230 0000 000	11	5	•
N	**1000 x 385 x 50 mm**			
	S202 1200 0000 000	9	5	•
N	**900 x 385 x 50 mm**			
	S202 1218 0000 000	8	5	•
N	**800 x 385 x 50 mm**			
	S202 1210 0000 000	7	5	•

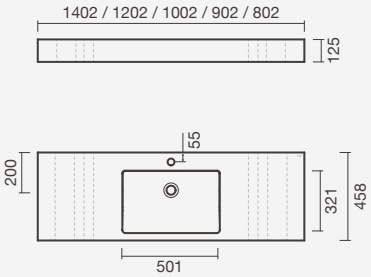

EVEN - CENTRAL BOWL without tap hole

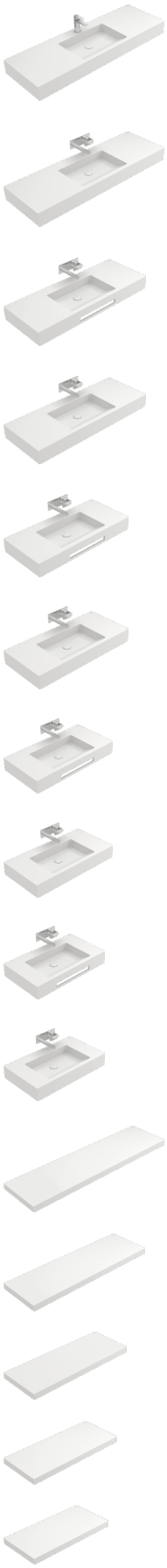

Washbasins 140, 120, 100, 90 and 80

> wall-mounted application - profile: 125mm
> without tap hole, without overflow
> in the box: washbasin and fixing kit

1400 x 460 mm - with towel rail	Weight	Pieces per pallet	€
S202 0911 1900 000	19	1	•
1400 x 460 mm - without towel rail			
S202 0910 0000 000	19	1	•
1200 x 460 mm - with towel rail			
S202 0941 1900 000	17	1	•
1200 x 460 mm - without towel rail			
S202 0940 0000 000	17	1	•
1000 x 460 mm - with towel rail			
S202 0971 1900 000	15	1	•
1000 x 460 mm - without towel rail			
S202 0970 0000 000	15	1	•
900 x 460 mm - with towel rail			
S202 1001 1900 000	14	1	•
900 x 460 mm - without towel rail			
S202 1000 0000 000	14	1	•
800 x 460 mm - with towel rail			
S202 1011 1900 000	13	1	•
800 x 460 mm - without towel rail			
S202 1010 0000 000	13	1	•

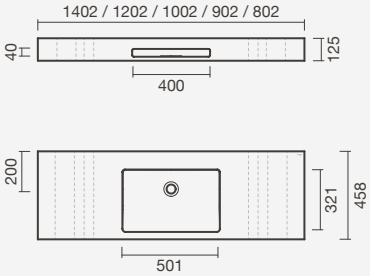

Shelf

> wall-mounted application
> in solid surface
> in the box: shelf and fixing kit

N	**1400 x 385 x 50 mm**			
	S202 1240 0000 000	12	5	•
N	**1200 x 385 x 50 mm**			
	S202 1230 0000 000	11	5	•
N	**1000 x 385 x 50 mm**			
	S202 1200 0000 000	9	5	•
N	**900 x 385 x 50 mm**			
	S202 1218 0000 000	8	5	•
N	**800 x 385 x 50 mm**			
	S202 1210 0000 000	7	5	•

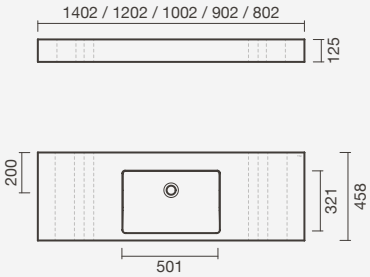

EVEN - BOWL TO THE LEFT with tap hole



Washbasins 140, 120 and 100

> wall-mounted application - profile: 125mm
> with tap hole (central to bowl), without overflow
> in the box: washbasin and fixing kit

1400 x 460 mm - with towel rail	Weight	Pieces per pallet	€
S202 0921 2000 000	19	1	•
1400 x 460 mm - without towel rail			
S202 0921 1700 000	19	1	•
1200 x 460 mm - with towel rail			
S202 0951 2000 000	17	1	•
1200 x 460 mm - without towel rail			
S202 0951 1700 000	17	1	•
1000 x 460 mm - with towel rail			
S202 0981 2000 000	15	1	•
1000 x 460 mm - without towel rail			
S202 0981 1700 000	15	1	•

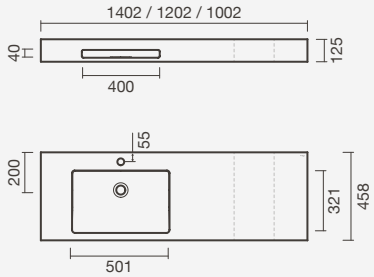

Shelf

> wall-mounted application
> in solid surface
> in the box: shelf and fixing kit

1400 x 385 x 50 mm			
S202 1240 0000 000	12	5	•
1200 x 385 x 50 mm			
S202 1230 0000 000	11	5	•
1000 x 385 x 50 mm			
S202 1200 0000 000	9	5	•

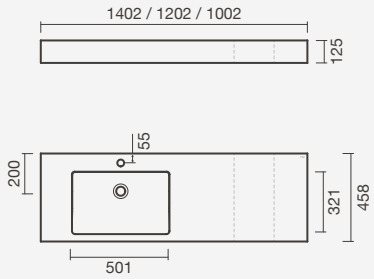

EVEN - BOWL TO THE LEFT without tap hole

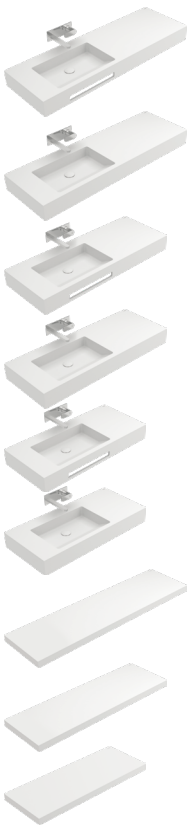

Washbasins 140, 120 and 100

> wall-mounted application - profile: 125mm
> without tap hole, without overflow
> in the box: washbasin and fixing kit

1400 x 460 mm - with towel rail	Weight	Pieces per pallet	€
S202 0921 1900 000	19	1	•
1400 x 460 mm - without towel rail			
S202 0920 0000 000	19	1	•
1200 x 460 mm - with towel rail			
S202 0951 1900 000	17	1	•
1200 x 460 mm - without towel rail			
S202 0950 0000 000	17	1	•
1000 x 460 mm - with towel rail			
S202 0981 1900 000	15	1	•
1000 x 460 mm - without towel rail			
S202 0980 0000 000	15	1	•

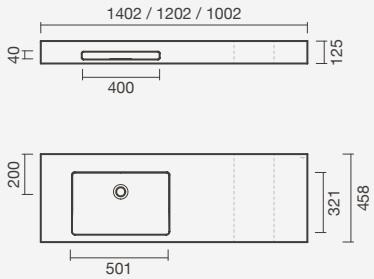

Shelf

> wall-mounted application
> in solid surface
> in the box: shelf and fixing kit

1400 x 385 x 50 mm			
S202 1240 0000 000	12	5	•
1200 x 385 x 50 mm			
S202 1230 0000 000	11	5	•
1000 x 385 x 50 mm			
S202 1200 0000 000	9	5	•

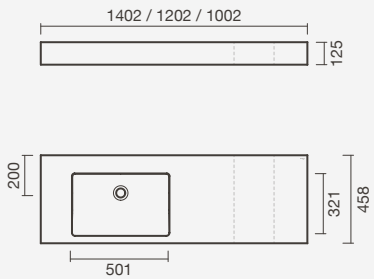

EVEN - BOWL TO THE RIGHT with tap hole

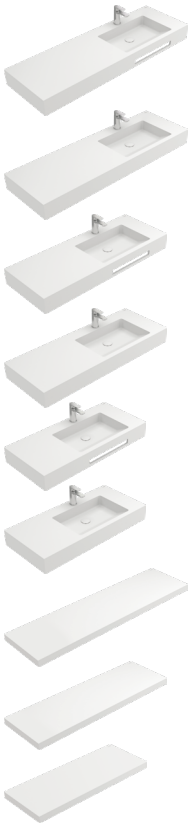

Washbasins 140, 120 and 100

> wall-mounted application - profile: 125mm
> with tap hole (central to bowl), without overflow
> in the box: washbasin and fixing kit

1400 x 460 mm - with towel rail	Weight	Pieces per pallet	€
S202 0931 2000 000	19	1	•
1400 x 460 mm - without towel rail			
S202 0931 1700 000	19	1	•
1200 x 460 mm - with towel rail			
S202 0961 2000 000	17	1	•
1200 x 460 mm - without towel rail			
S202 0961 1700 000	17	1	•
1000 x 460 mm - with towel rail			
S202 0991 2000 000	15	1	•
1000 x 460 mm - without towel rail			
S202 0991 1700 000	15	1	•

Shelf

> wall-mounted application
> in solid surface
> in the box: shelf and fixing kit

N	**1400 x 385 x 50 mm**			
	S202 1240 0000 000	12	5	•
N	**1200 x 385 x 50 mm**			
	S202 1230 0000 000	11	5	•
N	**1000 x 385 x 50 mm**			
	S202 1200 0000 000	9	5	•

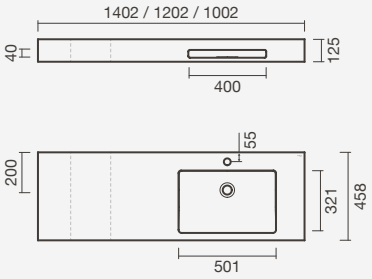

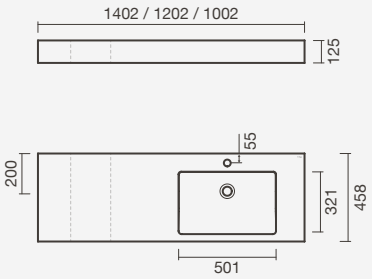

EVEN - BOWL TO THE RIGHT without tap hole

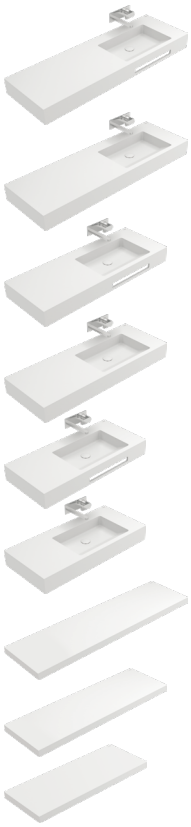

Washbasins 140, 120 and 100

> wall-mounted application - profile: 125mm
> without tap hole, without overflow
> in the box: washbasin and fixing kit

1400 x 460 mm - with towel rail	Weight	Pieces per pallet	€
S202 0931 1900 000	19	1	•
1400 x 460 mm - without towel rail			
S202 0930 0000 000	19	1	•
1200 x 460 mm - with towel rail			
S202 0961 1900 000	17	1	•
1200 x 460 mm - without towel rail			
S202 0960 0000 000	17	1	•
1000 x 460 mm - with towel rail			
S202 0991 1900 000	15	1	•
1000 x 460 mm - without towel rail			
S202 0990 0000 000	15	1	•

Shelf

> wall-mounted application
> in solid surface
> in the box: shelf and fixing kit

N	**1400 x 385 x 50 mm**			
	S202 1240 0000 000	12	5	•
N	**1200 x 385 x 50 mm**			
	S202 1230 0000 000	11	5	•
N	**1000 x 385 x 50 mm**			
	S202 1200 0000 000	9	5	•

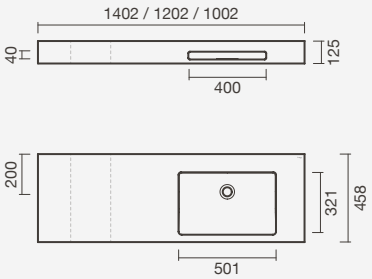

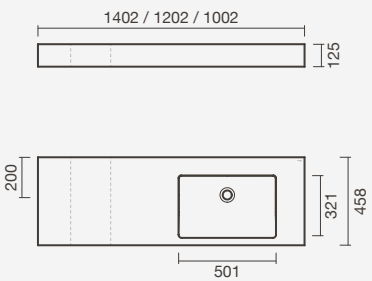



VELVET 120 *solid surface* wall-mounted washbasin with bowl to the left and towel rail, UNIC recessed mixer and MAYARA mirror

VELVET - TWO BOWLS with tap holes



Washbasins 160

1600 × 460 × 125mm

> wall-mounted application - profile: 125mm
> with tap holes (central to the bowls), without overflows
> in the box: washbasin and fixing kit

With towel rail	Weight	Pieces per pallet	€
S202 0381 2000 000	22	1	•
Without towel rail			
S202 0381 1700 000	22	1	•



Shelf

> wall-mounted application
> in solid surface
> in the box: shelf and fixing kit

1600 x 385 x 50 mm			
S202 1250 0000 000	14	5	•

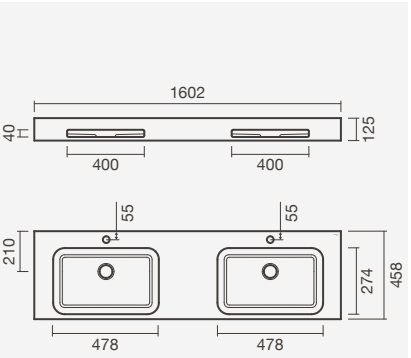

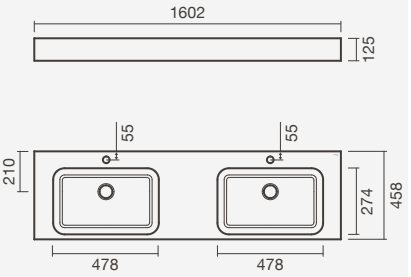

VELVET - TWO BOWLS without tap holes



Washbasins 160

1600 × 460 × 125mm

> wall-mounted application - profile: 125mm
> without tap holes, without overflows
> in the box: washbasin and fixing kit

With towel rail	Weight	Pieces per pallet	€
S202 0381 1900 000	22	1	•
Without towel rail			
S202 0380 0000 000	22	1	•



Shelf

> wall-mounted application
> in solid surface
> in the box: shelf and fixing kit

1600 x 385 x 50 mm			
S202 1250 0000 000	14	5	•

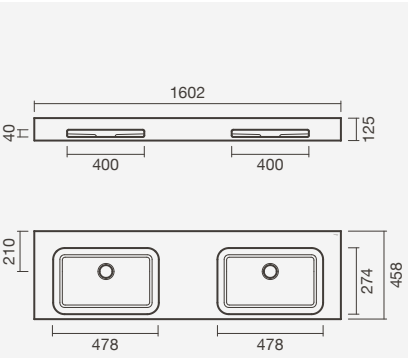

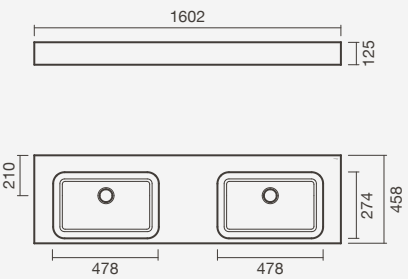

VELVET - CENTRAL BOWL with tap hole



Washbasins 140, 120, 100, 90, 80 and 60

> wall-mounted application - profile: 125mm
> with tap hole (central to bowl), without overflow
> in the box: washbasin and fixing kit

1400 x 460 mm - with towel rail	Weight	Pieces per pallet	€
S202 0391 2000 000	19	1	•
1400 x 460 mm - without towel rail			
S202 0391 1700 000	19	1	•
1200 x 460 mm - with towel			
S202 0421 2000 000	17	1	•
1200 x 460 mm - without towel rail			
S202 0421 1700 000	17	1	•
1000 x 460 mm - with towel rail			
S202 0451 2000 000	15	1	•
1000 x 460 mm - without towel rail			
S202 0451 1700 000	15	1	•
900 x 460 mm - with towel rail			
S202 0481 2000 000	13	1	•
900 x 460 mm - without towel rail			
S202 0481 1700 000	13	1	•
800 x 460 mm - with towel rail			
S202 0491 2000 000	12	1	•
800 x 460 mm - without towel rail			
S202 0491 1700 000	12	1	•
600 x 460 mm - with towel rail			
S202 0501 2000 000	10	1	•
600 x 460 mm - without towel rail			
S202 0501 1700 000	10	1	•

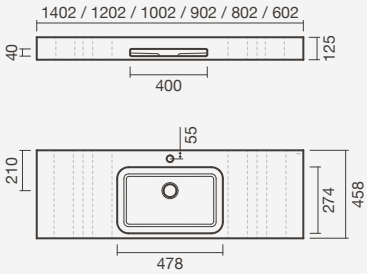

Shelf

> wall-mounted application
> in solid surface
> in the box: shelf and fixing kit

N	**1400 x 385 x 50 mm**			
N	S202 1240 0000 000	12	5	•
N	**1200 x 385 x 50 mm**			
N	S202 1230 0000 000	11	5	•
N	**1000 x 385 x 50 mm**			
N	S202 1200 0000 000	9	5	•
N	**900 x 385 x 50 mm**			
N	S202 1218 0000 000	8	5	•
N	**800 x 385 x 50 mm**			
N	S202 1210 0000 000	7	5	•
N	**600 x 385 x 50 mm**			
N	S202 1220 0000 000	6	5	•

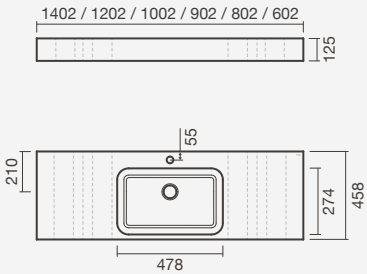

VELVET - CENTRAL BOWL without tap hole



Washbasins 140, 120, 100, 90, 80 and 60

> wall-mounted application - profile: 125mm
> without tap hole, without overflow
> in the box: washbasin and fixing kit

1400 x 460 mm - with towel rail	Weight	Pieces per pallet	€
S202 0391 1900 000	19	1	•
1400 x 460 mm - without towel rail			
S202 0390 0000 000	19	1	•
1200 x 460 mm - with towel rail			
S202 0421 1900 000	17	1	•
1200 x 460 mm - without towel rail			
S202 0420 0000 000	17	1	•
1000 x 460 mm - with towel rail			
S202 0451 1900 000	15	1	•
1000 x 460 mm - without towel rail			
S202 0450 0000 000	15	1	•
900 x 460 mm - with towel rail			
S202 0481 1900 000	13	1	•
900 x 460 mm - without towel rail			
S202 0480 0000 000	13	1	•
800 x 460 mm - with towel rail			
S202 0491 1900 000	12	1	•
800 x 460 mm - without towel rail			
S202 0490 0000 000	12	1	•
600 x 460 mm - with towel rail			
S202 0501 1900 000	12	1	•
600 x 460 mm - without towel rail			
S202 0500 0000 000	12	1	•

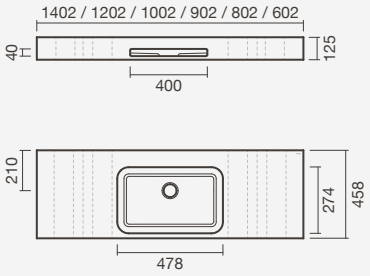

Shelf

> wall-mounted application
> in solid surface
> in the box: shelf and fixing kit

N	**1400 x 385 x 50 mm**			
	S202 1240 0000 000	12	5	•
N	**1200 x 385 x 50 mm**			
	S202 1230 0000 000	11	5	•
N	**1000 x 385 x 50 mm**			
	S202 1200 0000 000	9	5	•
N	**900 x 385 x 50 mm**			
	S202 1218 0000 000	8	5	•
N	**800 x 385 x 50 mm**			
	S202 1210 0000 000	7	5	•
N	**600 x 385 x 50 mm**			
	S202 1220 0000 000	6	5	•

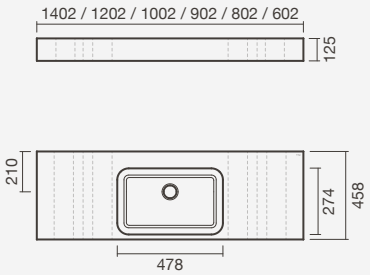

VELVET - BOWL TO THE LEFT with tap hole

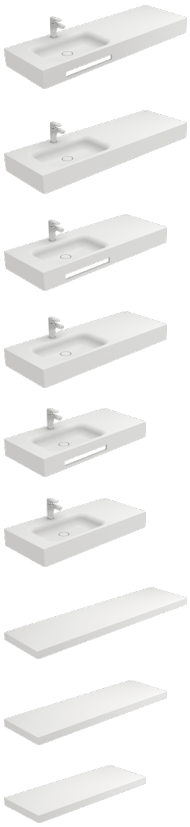

Washbasins 140, 120 and 100

> wall-mounted application - profile: 125mm
> with tap hole (central to bowl), without overflow
> in the box: washbasin and fixing kit

1400 x 460 mm - with towel rail	Weight	Pieces per pallet	€
S202 0401 2000 000	19	1	•
1400 x 460 mm - without towel rail			
S202 0401 1700 000	19	1	•
1200 x 460 mm - with towel rail			
S202 0431 2000 000	17	1	•
1200 x 460 mm - without towel rail			
S202 0431 1700 000	17	1	•
1000 x 460 mm - with towel rail			
S202 0461 2000 000	15	1	•
1000 x 460 mm - without towel rail			
S202 0461 1700 000	15	1	•

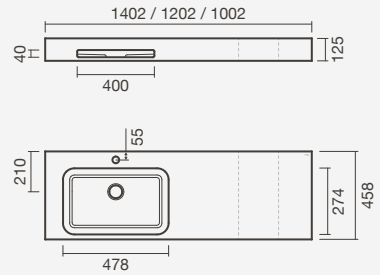

Shelf

> wall-mounted application
> in solid surface
> in the box: shelf and fixing kit

N	**1400 x 385 x 50 mm**			
N	S202 1240 0000 000	12	5	•
N	**1200 x 385 x 50 mm**			
N	S202 1230 0000 000	11	5	•
N	**1000 x 385 x 50 mm**			
N	S202 1200 0000 000	9	5	•

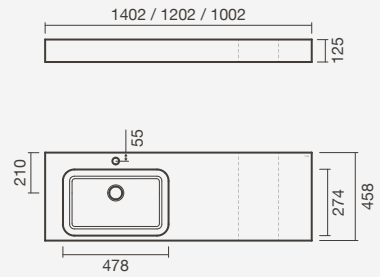

VELVET - BOWL TO THE LEFT without tap hole

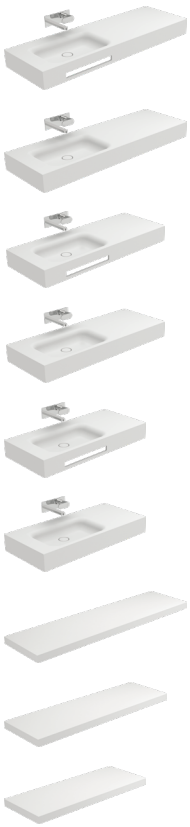

Washbasins 140, 120 and 100

> wall-mounted application - profile: 125mm
> without tap hole, without overflow
> in the box: washbasin and fixing kit

1400 x 460 mm - with towel rail	Weight	Pieces per pallet	€
S202 0401 1900 000	19	1	•
1400 x 460 mm - without towel rail			
S202 0400 0000 000	19	1	•
1200 x 460 mm - with towel rail			
S202 0431 1900 000	17	1	•
1200 x 460 mm - without towel rail			
S202 0430 0000 000	17	1	•
1000 x 460 mm - with towel rail			
S202 0461 1900 000	15	1	•
1000 x 460 mm - without towel rail			
S202 0460 0000 000	15	1	•

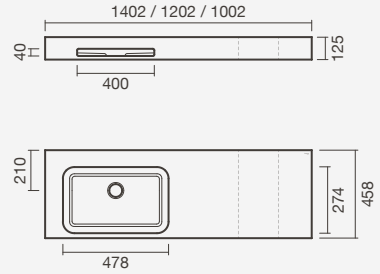

Shelf

> wall-mounted application
> in solid surface
> in the box: shelf and fixing kit

N	**1400 x 385 x 50 mm**			
N	S202 1240 0000 000	12	5	•
N	**1200 x 385 x 50 mm**			
N	S202 1230 0000 000	11	5	•
N	**1000 x 385 x 50 mm**			
N	S202 1200 0000 000	9	5	•

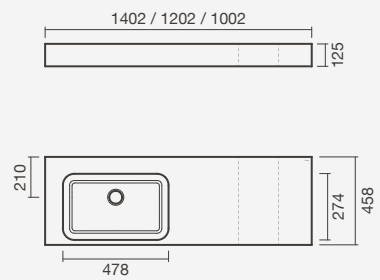

VELVET - BOWL TO THE RIGHT with tap hole



Washbasins 140, 120 and 100

> wall-mounted application - profile: 125mm
> with tap hole (central to bowl), without overflow
> in the box: washbasin and fixing kit

1400 x 460 mm - with towel rail	Weight	Pieces per pallet	€
S202 0411 2000 000	19	1	•
1400 x 460 mm - without towel rail			
S202 0411 1700 000	19	1	•
1200 x 460 mm - with towel rail			
S202 0441 2000 000	17	1	•
1200 x 460 mm - without towel rail			
S202 0441 1700 000	17	1	•
1000 x 460 mm - with towel rail			
S202 0471 2000 000	15	1	•
1000 x 460 mm - without towel rail			
S202 0471 1700 000	15	1	•

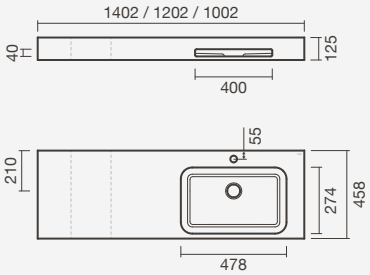

Shelf

> wall-mounted application
> in solid surface
> in the box: shelf and fixing kit

N	**1400 x 385 x 50 mm**			
N	S202 1240 0000 000	12	5	•
N	**1200 x 385 x 50 mm**			
N	S202 1230 0000 000	11	5	•
N	**1000 x 385 x 50 mm**			
N	S202 1200 0000 000	9	5	•

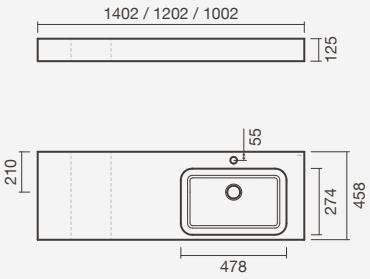

VELVET - BOWL TO THE RIGHT without tap hole

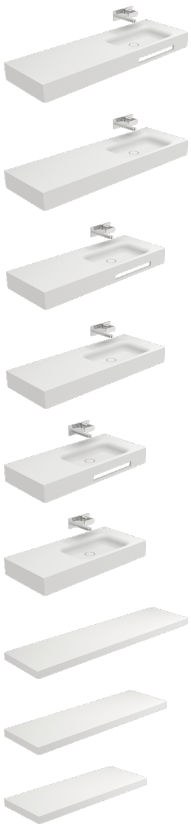

Washbasins 140, 120 and 100

> wall-mounted application - profile: 125mm
> without tap hole, without overflow
> in the box: washbasin and fixing kit

1400 x 460 mm - with towel rail	Weight	Pieces per pallet	€
S202 0411 1900 000	19	1	•
1400 x 460 mm - without towel rail			
S202 0410 0000 000	19	1	•
1200 x 460 mm - with towel rail			
S202 0441 1900 000	17	1	•
1200 x 460 mm - without towel rail			
S202 0440 0000 000	17	1	•
1000 x 460 mm - with towel rail			
S202 0471 1900 000	15	1	•
1000 x 460 mm - without towel rail			
S202 0470 0000 000	15	1	•

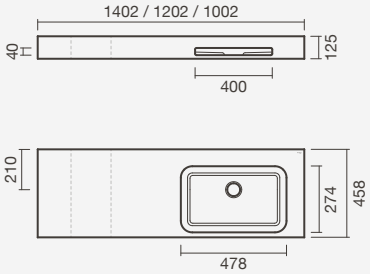

Shelf

> wall-mounted application
> in solid surface
> in the box: shelf and fixing kit

N	**1400 x 385 x 50 mm**			
N	S202 1240 0000 000	12	5	•
N	**1200 x 385 x 50 mm**			
N	S202 1230 0000 000	11	5	•
N	**1000 x 385 x 50 mm**			
N	S202 1200 0000 000	9	5	•

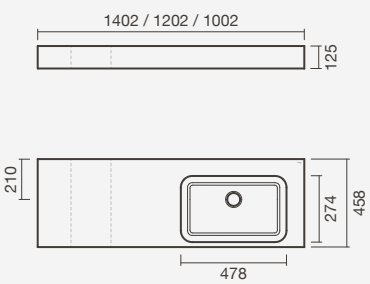



SLEEK 100 *solid surface* wall-mounted washbasin with ORBIS faucet

SLEEK with tap hole










Washbasins 100, 90, 80 and 60

> wall-mounted application - profile: 125mm
> with tap hole (central to bowl), without overflow
> in the box: washbasin and fixing kit

1000 x 460 mm - with towel rail	Weight	Pieces per pallet	€
S202 0301 2000 000	21	1	•
1000 x 460 mm - without towel rail			
S202 0301 1700 000	21	1	•
900 x 460 mm - with towel rail			
S202 0291 2000 000	20	1	•
900 x 460 mm - without towel rail			
S202 0291 1700 000	20	1	•
800 x 460 mm - with towel rail			
S202 0281 2000 000	18	1	•
800 x 460 mm - without towel rail			
S202 0281 1700 000	18	1	•
600 x 460 mm - with towel rail			
S202 0271 2000 000	15	1	•
600 x 460 mm - without towel rail			
S202 0271 1700 000	15	1	•

Shelf

> wall-mounted application
> in solid surface
> in the box: shelf and fixing kit

N	**1000 x 385 x 50 mm**			
	S202 1200 0000 000	9	5	•
N	**900 x 385 x 50 mm**			
	S202 1218 0000 000	8	5	•
N	**800 x 385 x 50 mm**			
	S202 1210 0000 000	7	5	•
N	**600 x 385 x 50 mm**			
	S202 1220 0000 000	6	5	•

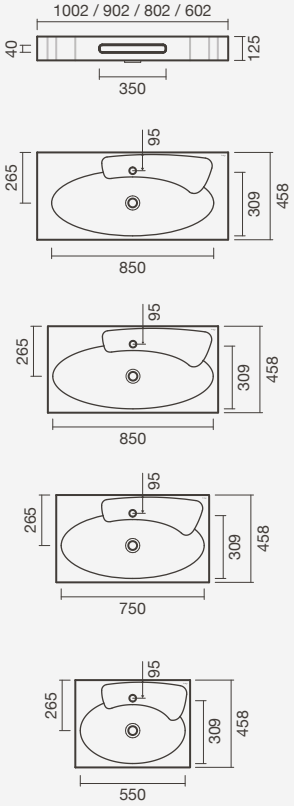

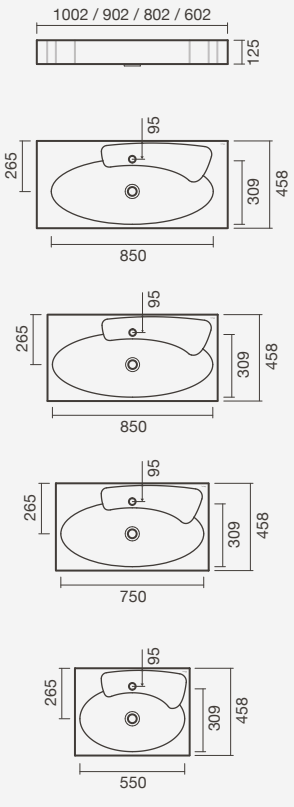

SLEEK without tap hole



Washbasins 100, 90, 80 and 60

> wall-mounted application - profile: 125mm
> without tap hole, without overflow
> in the box: washbasin and fixing kit

1000 x 460 mm - with towel rail	Weight	Pieces per pallet	€
S202 0301 1900 000	21	1	•
1000 x 460 mm - without towel rail			
S202 0300 0000 000	21	1	•
900 x 460 mm - with towel rail			
S202 0291 1900 000	20	1	•
900 x 460 mm - without towel rail			
S202 0290 0000 000	20	1	•
800 x 460 mm - with towel rail			
S202 0281 1900 000	18	1	•
800 x 460 mm - without towel rail			
S202 0280 0000 000	18	1	•
600 x 460 mm - with towel rail			
S202 0271 1900 000	15	1	•
600 x 460 mm - without towel rail			
S202 0270 0000 000	15	1	•

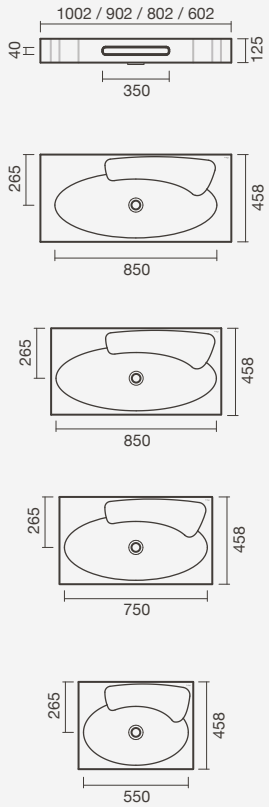

Shelf

> wall-mounted application
> in solid surface
> in the box: shelf and fixing kit

N	**1000 x 385 x 50 mm**			
	S202 1200 0000 000	9	5	•
N	**900 x 385 x 50 mm**			
	S202 1218 0000 000	8	5	•
N	**800 x 385 x 50 mm**			
	S202 1210 0000 000	7	5	•
N	**600 x 385 x 50 mm**			
	S202 1220 0000 000	6	5	•

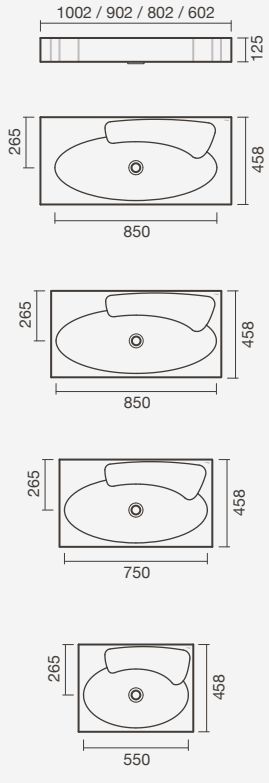



SLEEK 100 *solid surface* wall-mounted washbasin with towel rail and ORBIS wall-mounted faucet

Recessed models



EVEN 100 *solid surface* recessed washbasin with ARDEN 100 matte black - matte white vanity unit and SUN washbasin faucet with a matte black finish

EVEN with tap hole



Washbasin 120

1200 × 460 × 12mm

> recessed application - profile: 12mm
> with tap hole (central to the bowl), without overflow
> compatible with Tahoe 120 vanity unit
> in the box: washbasin

Reference	Weight	Pieces per pallet	€
S202 0861 1700 000	13	1	•

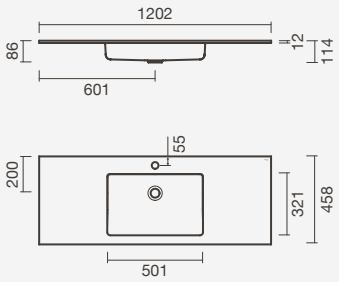

EVEN without tap hole



Washbasin 120

1200 × 460 × 12mm

> recessed application - profile: 12mm
> without tap hole, without overflow
> compatible with Tahoe 120 vanity unit
> in the box: washbasin

Reference	Weight	Pieces per pallet	€
S202 0860 0000 000	13	1	•

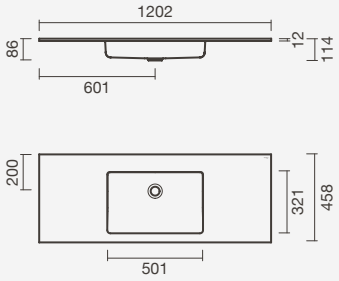

EVEN with tap hole



Washbasin 100

1000 × 460 × 12mm

> recessed application - profile: 12mm
> with tap hole (central to the bowl), without overflow
> compatible with Arden, Harapan and Tahoe 100 vanity units
> in the box: washbasin

Reference	Weight	Pieces per pallet	€
S202 0871 1700 000	11	1	•

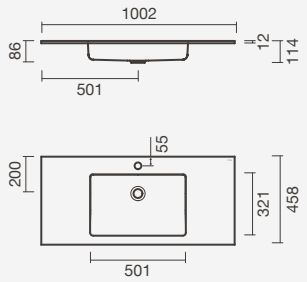

EVEN without tap hole



Washbasin 100

1000 × 460 × 12mm

> recessed application - profile: 12mm
> without tap hole, without overflow
> compatible with Arden, Harapan and Tahoe 100 vanity units
> in the box: washbasin

Reference	Weight	Pieces per pallet	€
S202 0870 0000 000	11	1	•

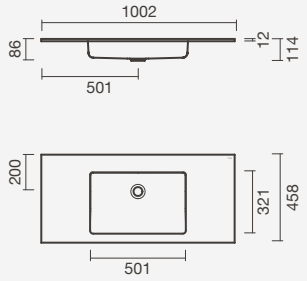

EVEN with tap hole



Washbasin 90

900 × 460 × 12mm

> recessed application - profile: 12mm
> with tap hole (central to the bowl), without overflow
> compatible with Arden and Harapan 90 vanity units
> in the box: washbasin

Reference	Weight	Pieces per pallet	€
S202 0881 1700 000	10	1	•

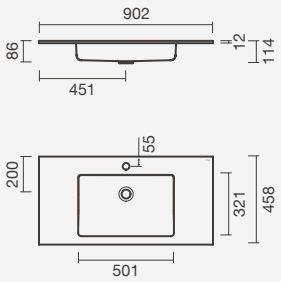

EVEN without tap hole



Washbasin 90

900 × 460 × 12mm

> recessed application - profile: 12mm
> without tap hole, without overflow
> compatible with Arden and Harapan 90 vanity units
> in the box: washbasin

Reference	Weight	Pieces per pallet	€
S202 0880 0000 000	10	1	•

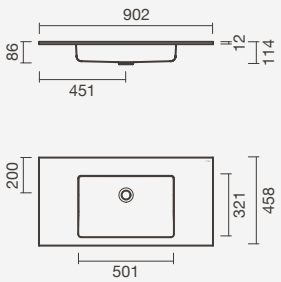

EVEN with tap hole



Washbasin 80

800 × 460 × 12mm

> recessed application - profile: 12mm
> with tap hole (central to the bowl), without overflow
> compatible with Arden, Harapan, Weza and Tahoe 80 vanity units
> in the box: washbasin

Reference	Weight	Pieces per pallet	€
S202 0891 1700 000	9	1	•

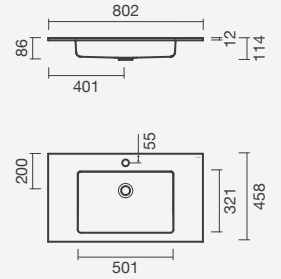

EVEN without tap hole



Washbasin 80

800 × 460 × 12mm

> recessed application - profile: 12mm
> without tap hole, without overflow
> compatible with Arden, Harapan, Weza and Tahoe 80 vanity units
> in the box: washbasin

Reference	Weight	Pieces per pallet	€
S202 0890 0000 000	9	1	•

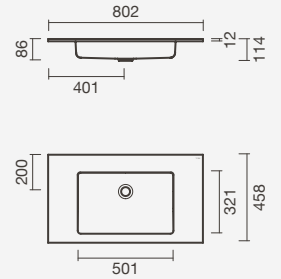



EVEN 100 *solid surface* recessed washbasin with ARDEN 100 matte black - matte white vanity unit and SUN washbasin faucet with a matte black finish



VELVET 100 *solid surface* recessed washbasin, HARAPAN 100 vanity unit in oak - white colour and BALANCE washbasin faucet

VELVET with tap hole



Washbasin 120

1200 × 460 × 12mm

> recessed application - profile: 12mm
> with tap hole (central to the bowl), without overflow
> compatible with Tahoe 120 vanity unit
> in the box: washbasin

Reference	Weight	Pieces per pallet	€
S202 0331 1700 000	12	1	•

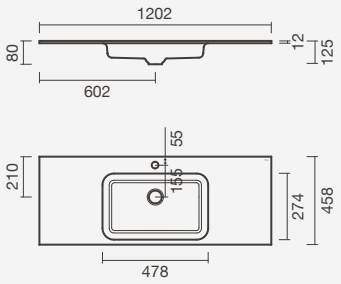

VELVET without tap hole



Washbasin 120

1200 × 460 × 12mm

> recessed application - profile: 12mm
> without tap hole, without overflow
> compatible with Tahoe 120 vanity unit
> in the box: washbasin

Reference	Weight	Pieces per pallet	€
S202 0330 0000 000	12	-	•

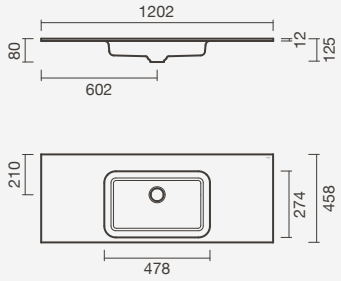

VELVET with tap hole



Washbasin 100

1000 × 460 × 12mm

> recessed application - profile: 12mm
> with tap hole (central to the bowl), without overflow
> compatible with Arden, Harapan and Tahoe 100 vanity units
> in the box: washbasin

Reference	Weight	Pieces per pallet	€
S202 0341 1700 000	11	1	•

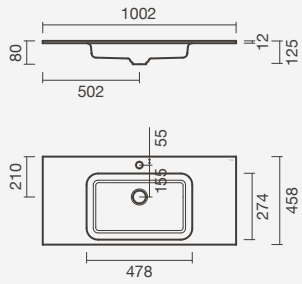

VELVET without tap hole



Washbasin 100

1000 × 460 × 12mm

> recessed application - profile: 12mm
> without tap hole, without overflow
> compatible with Arden, Harapan and Tahoe 100 vanity units
> in the box: washbasin

Reference	Weight	Pieces per pallet	€
S202 0340 0000 000	11	1	•

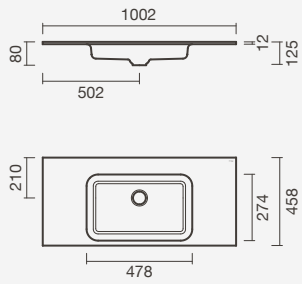

VELVET with tap hole



Washbasin 90

900 × 460 × 12mm

> recessed application - profile: 12mm
> with tap hole (central to the bowl), without overflow
> compatible with Arden and Harapan 90 vanity units
> in the box: washbasin

Reference	Weight	Pieces per pallet	€
S202 0351 1700 000	10	1	•

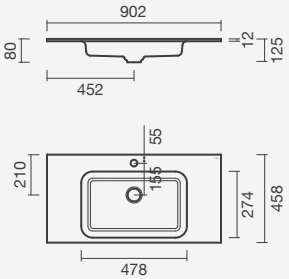

VELVET without tap hole



Washbasin 90

900 × 460 × 12mm

> recessed application - profile: 12mm
> without tap hole, without overflow
> compatible with Arden and Harapan 90 vanity units
> in the box: washbasin

Reference	Weight	Pieces per pallet	€
S202 0350 0000 000	10	1	•

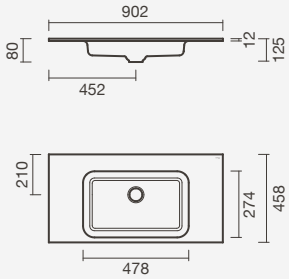

VELVET with tap hole



Washbasin 80

800 × 460 × 12mm

> recessed application - profile: 12mm
> with tap hole (central to the bowl), without overflow
> compatible with Arden, Harapan, Weza and Tahoe 80 vanity units
> in the box: washbasin

Reference	Weight	Pieces per pallet	€
S202 0361 1700 000	9	1	•

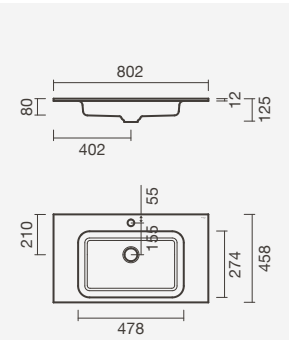

VELVET without tap hole



Washbasin 80

800 × 460 × 12mm

> recessed application - profile: 12mm
> without tap hole, without overflow
> compatible with Arden, Harapan, Weza and Tahoe 80 vanity units
> in the box: washbasin

Reference	Weight	Pieces per pallet	€
S202 0360 0000 000	9	1	•

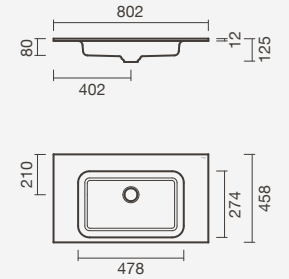

VELVET with tap hole



Washbasin 60

600 × 460 × 12mm

> recessed application - profile: 12mm
> with tap hole (central to the bowl), without overflow
> compatible with Tahoe 60 vanity units
> in the box: washbasin

Reference	Weight	Pieces per pallet	€
S202 0371 1700 000	7	1	•

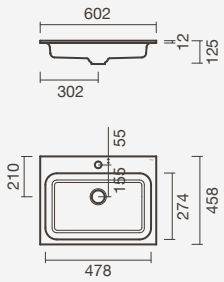

VELVET without tap hole



Washbasin 60

600 × 460 × 12mm

> recessed application - profile: 12mm
> without tap hole, without overflow
> compatible with Tahoe 60 vanity units
> in the box: washbasin

Reference	Weight	Pieces per pallet	€
S202 0370 0000 000	7	1	•

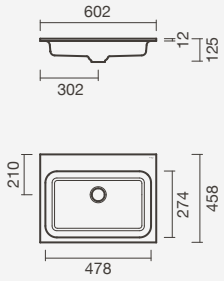



VELVET 120 *solid surface* recessed washbasin with TAHOE 100 white vanity unit and SUN faucet

SLEEK with tap hole



Washbasin 100

1000 × 460 × 12mm

> recessed application - profile: 12mm
> with tap hole (central to the bowl), without overflow
> compatible with Arden, Harapan and Tahoe 100 vanity units
> in the box: washbasin

Reference	Weight	Pieces per pallet	€
S202 0261 1700 000	15	1	•

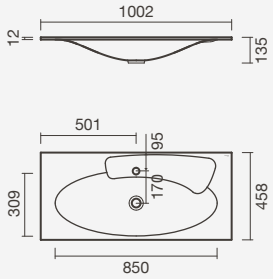

SLEEK without tap hole



Washbasin 100

1000 × 460 × 12mm

> recessed application - profile: 12mm
> without tap hole, without overflow
> compatible with Arden, Harapan and Tahoe 100 vanity units
> in the box: washbasin

Reference	Weight	Pieces per pallet	€
S202 0260 0000 000	15	1	•

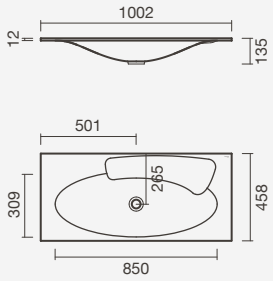

SLEEK with tap hole



Washbasin 90

900 × 460 × 12mm

> recessed application - profile: 12mm
> with tap hole (central to the bowl), without overflow
> compatible with Arden and Harapan 90 vanity units
> in the box: washbasin

Reference	Weight	Pieces per pallet	€
S202 0251 1700 000	14	1	•

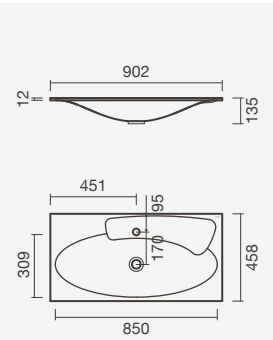

SLEEK without tap hole



Washbasin 90

900 × 460 × 12mm

> recessed application - profile: 12mm
> without tap hole, without overflow
> compatible with Arden and Harapan 90 vanity units
> in the box: washbasin

Reference	Weight	Pieces per pallet	€
S202 0250 0000 000	14	1	•

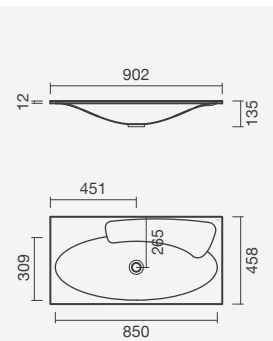

SLEEK with tap hole



Washbasin 80

800 × 460 × 12mm

> recessed application - profile: 12mm
> with tap hole (central to the bowl), without overflow
> compatible with Arden, Harapan, Weza and Tahoe 80 vanity units
> in the box: washbasin

Reference	Weight	Pieces per pallet	€
S202 0241 1700 000	13	1	•

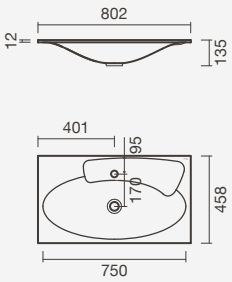

SLEEK without tap hole



Washbasin 80

800 × 460 × 12mm

> recessed application - profile: 12mm
> without tap hole, without overflow
> compatible with Arden, Harapan, Weza and Tahoe 80 vanity units
> in the box: washbasin

Reference	Weight	Pieces per pallet	€
S202 0240 0000 000	13	1	•

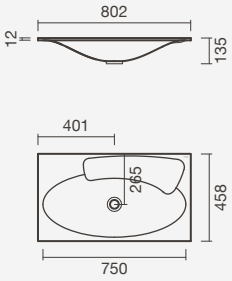

SLEEK with tap hole



Washbasin 60

600 × 460 × 12mm

> recessed application - profile: 12mm
> with tap hole (central to the bowl), without overflow
> compatible with Tahoe 60 vanity units
> in the box: washbasin

Reference	Weight	Pieces per pallet	€
S202 0231 1700 000	10	1	•

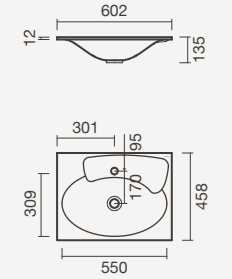

SLEEK without tap hole



Washbasin 60

600 × 460 × 12mm

> recessed application - profile: 12mm
> without tap hole, without overflow
> compatible with Tahoe 60 vanity units
> in the box: washbasin

Reference	Weight	Pieces per pallet	€
S202 0230 0000 000	10	1	•

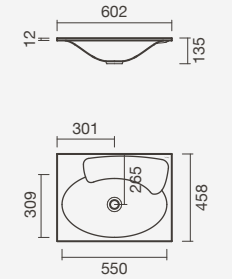

Countertop washbasins



HALO round countertop washbasin with SUN high spout washbasin faucet, STUDIO soap dispenser and WILLOW 80 white vanity unit

HALO Round

NEW







Washbasin 38

380 × 380 × 140mm

> countertop application
> without tap hole, without overflow
> outlet waste with ceramic valve cover
> in the box: washbasin and outlet waste with ceramic valve cover

White	Weight	Pieces per pallet	€
S102 0905 0400 000	8	48	•
Matte White			
S102 0905 0406 400	8	48	•
Matte Black			
S102 0905 0471 600	8	48	•



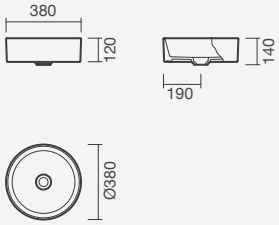

HALO Square

NEW







Washbasin 38

380 × 380 × 140mm

> countertop application
> without tap hole, without overflow
> outlet waste with ceramic valve cover
> in the box: washbasin and outlet waste with ceramic valve cover

White	Weight	Pieces per pallet	€
S102 0915 0400 000	10	48	•
Matte White			
S102 0915 0406 400	10	48	•
Matte Black			
S102 0915 0471 600	10	48	•



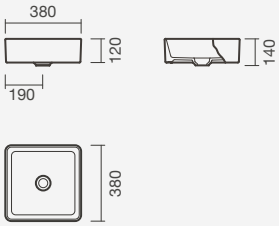

HALO Rectangular

NEW







Washbasin 60

600 × 380 × 140mm

> countertop application
> without tap hole, without overflow
> outlet waste with ceramic valve cover
> in the box: washbasin and outlet waste with ceramic valve cover

White	Weight	Pieces per pallet	€
S102 0925 0400 000	12	24	•
Matte White			
S102 0925 0406 400	12	24	•
Matte Black			
S102 0925 0471 600	12	24	•



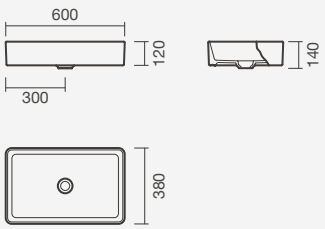

ARENA

Washbasin 70

700 × 380 × 128mm

> countertop application
> without tap hole, without overflow
> in the box: washbasin

Reference	Weight	Pieces per pallet	€
S100 0915 0400 000	13	24	•





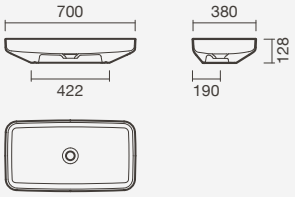

ARENA

Washbasin 38

380 × 380 × 128mm

> countertop application
> without tap hole, without overflow
> in the box: washbasin

Reference	Weight	Pieces per pallet	€
S100 0905 0400 000	8	39	•





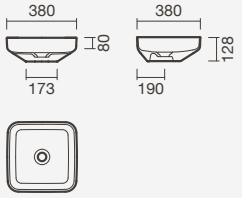

TRIK

Washbasin 73

730 × 440 × 170mm

> countertop application
> without tap hole, without overflow
> with ceramic outlet waste valve cover
> in the box: washbasin and ceramic outlet waste valve cover

Reference	Weight	Pieces per pallet	€
S100 1675 0400 000	14	18	•





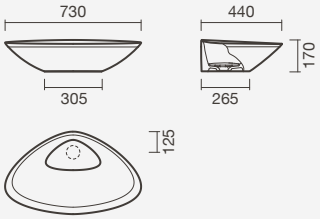

ORBIT



Washbasin 44

440 × 500 × 160mm

> countertop application
> without tap hole, without overflow
> outlet waste with ceramic valve cover
> in the box: washbasin and outlet waste with ceramic valve cover

Reference	Weight	Pieces per pallet	€
S100 1305 0400 000	11	42	•



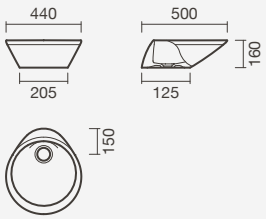

ELIPSE



Washbasin 63

630 × 430 × 190mm

> countertop application
> without tap hole, without overflow
> in the box: washbasin

Reference	Weight	Pieces per pallet	€
S100 6535 0400 000	12	24	•



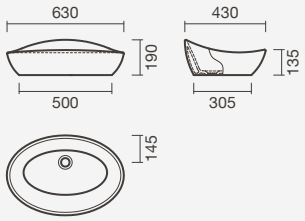

ALBUS



Washbasin 101

1010 × 455 × 145mm

> countertop application
> with tap hole (central to the bowl), with overflow
> compatible with Weza 100 vanity unit
> in the box: washbasin

Reference	Weight	Pieces per pallet	€
S102 0091 6400 000	29	21	•



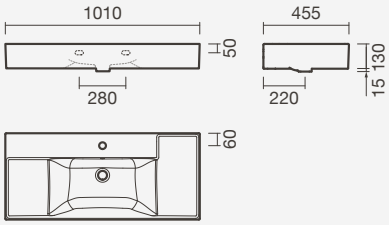

ALBUS

Washbasin 81

810 × 455 × 145mm

> countertop application
> with tap hole (central to the bowl), with overflow
> compatible with Weza and Casual 80 vanity units
> in the box: washbasin

Reference	Weight	Pieces per pallet	€
S102 0021 6400 000	24	27	•





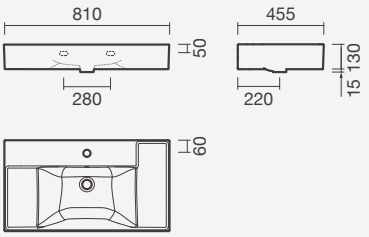

ALBUS

Washbasin 61

610 × 455 × 130mm

> countertop application
> with tap hole (central to the bowl), with overflow
> compatible with Weza and Casual 60 vanity units
> in the box: washbasin

Reference	Weight	Pieces per pallet	€
S100 8511 6400 000	16	32	•





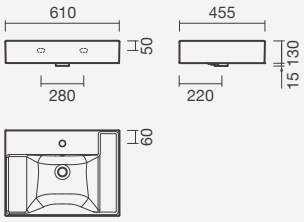

ALBUS

Washbasins 61

605 × 455 × 130mm

> countertop application
> with tap hole (central to the bowl)
> compatible with Weza 60 vanity unit
> in the box: washbasin

Options

With overflow	Weight	Pieces per pallet	€
S100 8518 0800 000	18	32	•
Without overflow			
S100 8518 0900 000	18	32	•





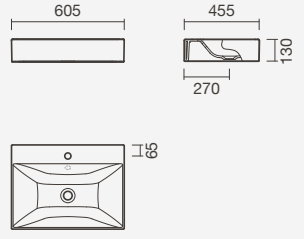

ALBUS



Washbasins 61

605 × 455 × 130mm

> countertop application
> without tap hole
> compatible with Weza 60 vanity unit
> in the box: washbasin

Options

With overflow	Weight	Pieces per pallet	€
S100 8518 1100 000	18	32	•
Without overflow			
S100 8518 1200 000	18	32	•





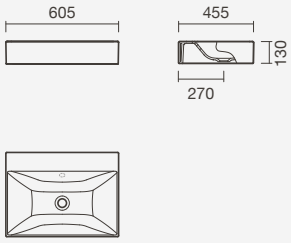



ALBUS 100 countertop washbasin and BALANCE faucet

ALBUS



Washbasins 45

450 × 450 × 130mm

> countertop application
> with tap hole (central to the bowl)
> in the box: washbasin

Options

With overflow	Weight	Pieces per pallet	€
S100 8508 0800 000	14	32	•
Without overflow			
S100 8508 0900 000	14	32	•





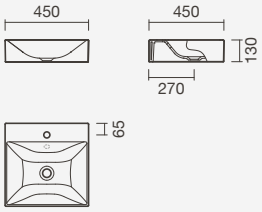

ALBUS



Washbasins 45

450 × 450 × 130mm

> countertop application
> without tap hole
> in the box: washbasin

Options

With overflow	Weight	Pieces per pallet	€
S100 8508 1100 000	14	32	•
Without overflow			
S100 8508 1200 000	14	32	•





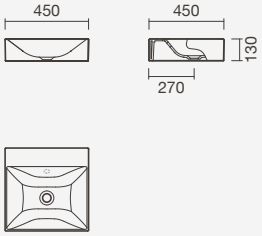

URBAN



Washbasin 45

450 × 450 × 165mm

> countertop application
> with tap hole (central to the bowl), with overflow
> in the box: washbasin

Reference	Weight	Pieces per pallet	€
S100 1691 7600 000	12	32	•



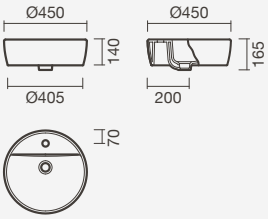

CUP



Washbasin 41

410 × 350 × 145mm

> countertop application
> without tap hole, without overflow
> in the box: washbasin

Reference	Weight	Pieces per pallet	€
S100 0995 0400 000	5	48	•



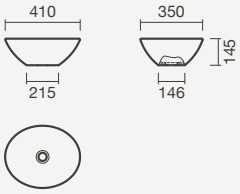

BE YOU







Washbasins 60, 55 and 40

> countertop application
> with tap hole (central to the bowl), with overflow
> in the box: washbasin

600 x 430 x 165 mm	Weight	Pieces per pallet	€
S102 0041 6400 000	19	32	•
550 x 430 x 165 mm			
S100 6173 6200 000	18	32	•
400 x 430 x 165 mm			
S100 6163 6200 000	14	32	•

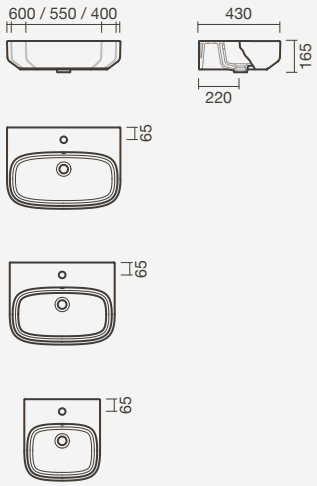

LOFT



Washbasins 60 and 55

> countertop application
> with tap hole (central to the bowl), with overflow
> in the box: washbasin

600 x 490 x 170 mm	Weight	Pieces per pallet	€
S102 0578 0700 001	18	24	•
550 x 490 x 170 mm			
S102 0588 0700 001	17	24	•





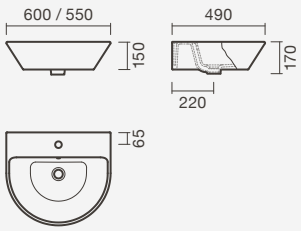

Countertop / wall-mounted models



ALBUS 40 countertop / wall-mounted washbasin with BALANCE faucet

CUBIC







Washbasins 80, 60 and 50

> countertop / wall-mounted application
> with tap hole (to the right of the bowl), with overflow
> incompatible with cold start faucets
> in the box: washbasin and fixing kit

795 x 345 x 145 mm	Weight	Pieces per pallet	€
S100 6643 5900 000	17	24	•
595 x 340 x 145 mm			
S100 6633 5900 000	15	32	•
500 x 345 x 150 mm			
S100 6623 5900 000	12	32	•



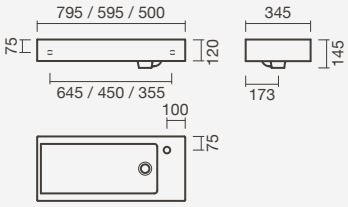

CITY

Washbasin 48

480 × 480 × 180mm

> countertop / wall-mounted application
> with tap hole (central to the bowl), with overflow
> in the box: washbasin and fixing kit

Reference	Weight	Pieces per pallet	€
S100 0973 6200 000	15	30	•





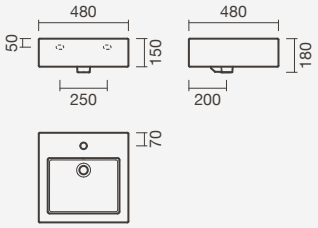

ALBUS - COMPACT

Washbasin 40

400 × 230 × 110mm

> countertop / wall-mounted application
> with tap hole (to the right of the bowl), without overflow
> compatible with Pike 40 vanity units
> in the box: washbasin and fixing kit

Reference	Weight	Pieces per pallet	€
S102 0311 6400 000	7	32	•





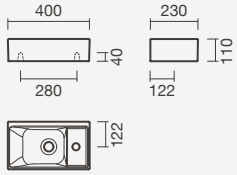

POP ART



Washbasins 62 and 57

> countertop / wall-mounted application
> with tap hole (central to the bowl), with overflow
> compatible with Pop Art siphon cover and pedestal
> in the box: washbasin and fixing kit

620 x 485 x 185 mm	Weight	Pieces per pallet	€
S100 7843 6200 000	19	32	•
570 x 485 x 185 mm			
S100 7833 6200 000	18	32	•



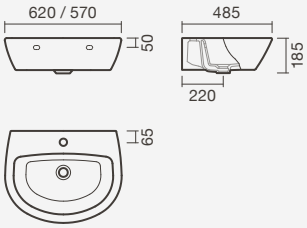

POP ART

Washbasin 51

505 × 440 × 185 mm

> countertop / wall-mounted application
> with tap hole (central to the bowl), with overflow
> compatible with Pop Art siphon cover
> in the box: washbasin and fixing kit

Reference	Weight	Pieces per pallet	€
S100 7823 6200 000	13	32	•





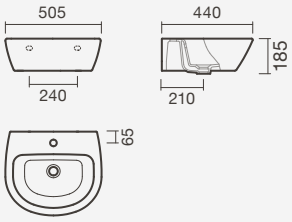

POP ART - COMPACT

Washbasin 40

400 × 350 × 170mm

> countertop / wall-mounted application
> with tap hole (to the right of the bowl), with overflow
> incompatible with cold start faucets
> in the box: washbasin and fixing kit

Reference	Weight	Pieces per pallet	€
S100 7811 6900 000	10	48	•





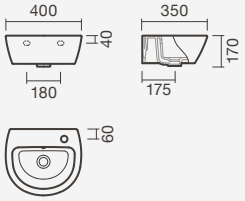



POP ART 51 countertop / wall-mounted washbasin and LOOP faucet

Wall-mounted washbasins



ALBUS 61 wall-mounted washbasins with BALANCE faucets

ALBUS

Washbasin 101

1010 × 455 × 145mm

> wall-mounted application
> with tap hole (central to the bowl), with overflow
> compatible with Weza 100 vanity unit
> in the box: washbasin and fixing kit

Reference	Weight	Pieces per pallet	€
S102 0091 7200 000	29	21	•



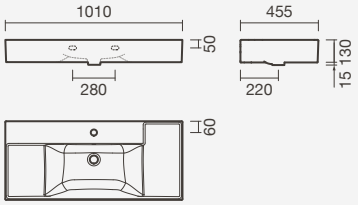

ALBUS

Washbasin 81

810 × 455 × 145mm

> wall-mounted application
> with tap hole (central to the bowl), with overflow
> compatible with Weza and Casual 80 vanity units
> in the box: washbasin and fixing kit

Reference	Weight	Pieces per pallet	€
S102 0021 6900 000	27	24	•



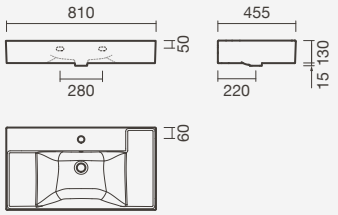

ALBUS

Washbasin 61

610 × 455 x145mm

> wall-mounted application
> with tap hole (central to the bowl), with overflow
> compatible with Weza and Casual 60 vanity units
> in the box: washbasin and fixing kit

Reference	Weight	Pieces per pallet	€
S100 8511 7200 000	27	24	•





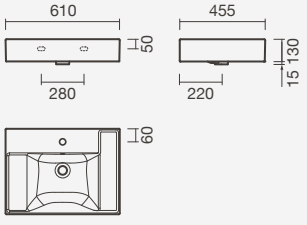

ALBUS



Washbasin 45

450 × 450 × 150mm

> wall-mounted application
> with tap hole (central to the bowl), with overflow
> in the box: washbasin and fixing kit

Reference	Weight	Pieces per pallet	€
S102 0323 6200 000	16	32	•



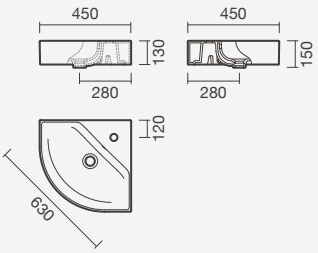



SHAPE wall-mounted washbasin with SUN electronic faucet

ISLA - COMPACT



Washbasin 40

395 × 505 × 190mm

> wall-mounted application (corner)
> with tap hole (central to the bowl), with overflow
> incompatible with cold start faucets
> in the box: washbasin and fixing kit

Reference	Weight	Pieces per pallet	€
S100 6611 7200 000	12	32	•



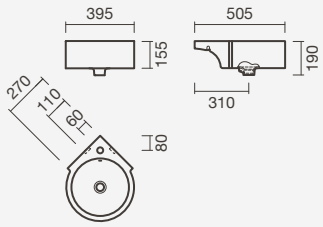

SHAPE



Washbasin 53

530 × 485 × 600mm

> wall-mounted application
> with tap hole (central to the bowl), with overflow
> in the box: washbasin and fixing kit

Reference	Weight	Pieces per pallet	€
S100 1511 7200 000	37	6	•



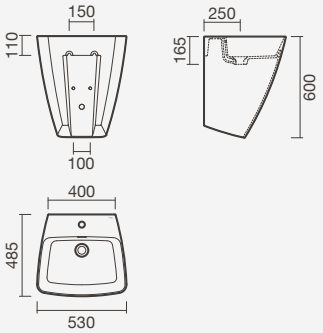

DROP



Washbasin 70

700 × 350 × 155mm

> wall-mounted application
> with tap hole (to the right of the bowl), without overflow
> in the box: washbasin and fixing kit

Reference	Weight	Pieces per pallet	€
S100 1001 7200 000	12	28	•



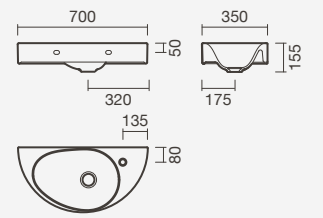

BE YOU



Washbasins 60, 55 and 40

> wall-mounted application
> with tap hole (central to the bowl), with overflow
> compatible with Be You siphon cover
> in the box: washbasin and fixing kit

600 x 430 x 165 mm	Weight	Pieces per pallet	€
S102 0041 7200 000	19	32	•
550 x 430 x 165 mm			
S100 6171 7200 000	17	32	•
400 x 430 x 165 mm			
S100 6161 7200 000	14	32	•







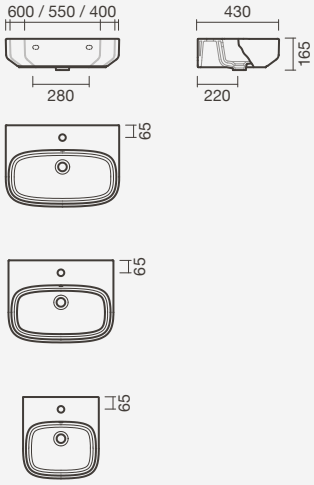



BE YOU 60 wall-mounted washbasin with UNIC faucet

BE YOU - COMPACT

Washbasin 42

420 × 460 × 170mm

> wall-mounted application (corner)
> with tap hole (central to the bowl), with overflow
> incompatible with cold start faucets
> in the box: washbasin and fixing kit

Reference	Weight	Pieces per pallet	€
S102 0061 7200 000	11	32	•



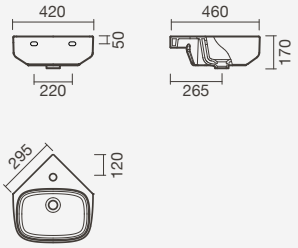

LOFT

Washbasins 60 and 55

> wall-mounted application
> with tap hole (central to the bowl), with overflow
> compatible with Loft siphon cover and pedestal
> in the box: washbasin and fixing kit

600 x 490 x 170 mm	Weight	Pieces per pallet	€
S102 0573 6200 001	18	24	•
550 x 490 x 170 mm			
S102 0583 6200 001	17	24	•









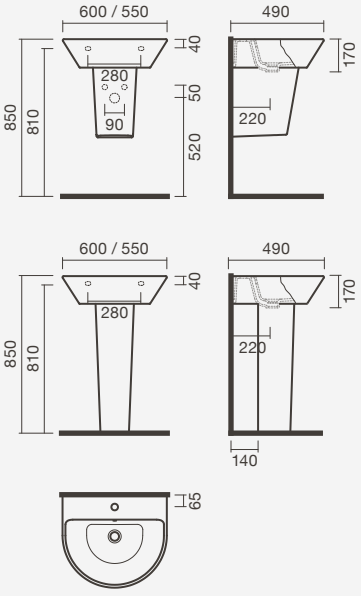

LOFT



Washbasin 40

400 × 400 × 170mm

> wall-mounted application
> with tap hole (central to the bowl), with overflow
> in the box: washbasin and fixing kit

Reference	Weight	Pieces per pallet	€
S102 0593 6200 001	12	24	•

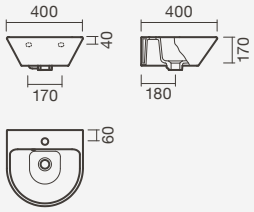

MOBIL



Washbasin 64

640 × 550 × 170mm

> wall-mounted application
> with tap hole (central to the bowl), without overflow
> in the box: washbasin and fixing kit

Reference	Weight	Pieces per pallet	€
H813 7140 0009 51	20	18	•

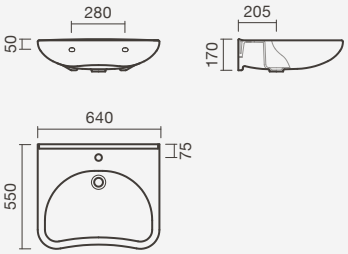





MUNIQUE 60 wall-mounted washbasin with siphon cover and BLOOM faucet

MUNIQUE





Washbasins 60 and 56

> wall-mounted application
> with tap hole (central to the bowl), with overflow
> compatible with Munique siphon cover and pedestal
> in the box: washbasin and fixing kit

600 x 470 x 215 mm	Weight	Pieces per pallet	€
S100 1241 7200 000	16	30	•
560 x 435 x 205 mm			
S100 1221 7200 000	14	30	•



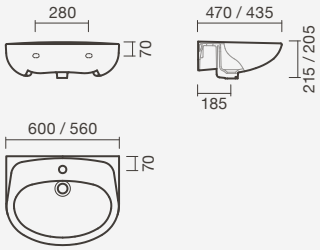

MUNIQUE



Washbasin 47

465 × 360 × 185mm

> wall-mounted application
> with tap hole (central to the bowl), with overflow
> in the box: washbasin and fixing kit

Reference	Weight	Pieces per pallet	€
S100 1191 7200 000	7	48	•

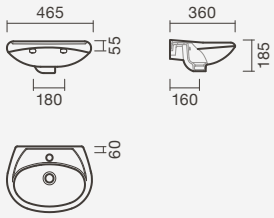

MUNIQUE - COMPACT



Washbasin 35

350 × 225 × 150mm

> wall-mounted application
> with tap hole (to the right of the bowl), with overflow
> incompatible with cold start faucets
> in the box: washbasin

Reference	Weight	Pieces per pallet	€
S100 7151 6900 000	4	112	•



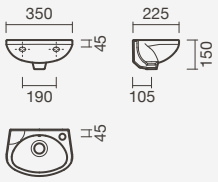

CENT







Washbasins 60, 55, 50 and 45

> wall-mounted application
> with tap hole (central to the bowl), with overflow
> compatible with Cent siphon cover and pedestal
> in the box: washbasin and fixing kit

	600 x 450 x 200 mm	Weight	Pieces per pallet	€
	S102 0891 7200 000	14	40	•
	550 x 450 x 200 mm			
	S102 0661 7200 000	14	40	•
	500 x 400 x 200 mm			
	S102 0671 7200 000	12	40	•
	450 x 400 x 200 mm			
	S102 0881 7200 000	12	40	•



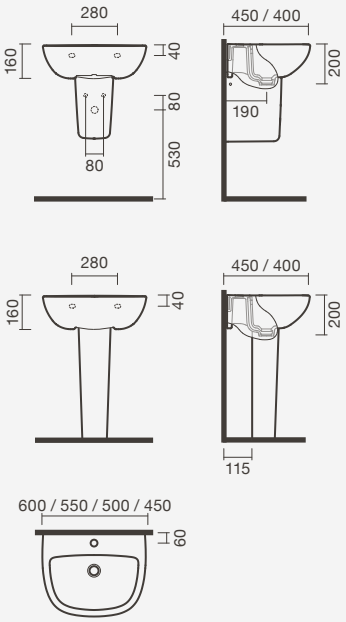



CENT 50 wall-mounted washbasin with siphon cover and PRIM faucet

GRECIA

Washbasins 73 and 65

> wall-mounted application
> with tap hole (central to the bowl), with overflow
> compatible with Grecia pedestal
> in the box: washbasin and fixing kit

730 x 610 x 335 mm	Weight	Pieces per pallet	€
S101 0340 0000 000	26	16	•
645 x 565 x 310 mm			
S100 6991 7200 000	21	36	•







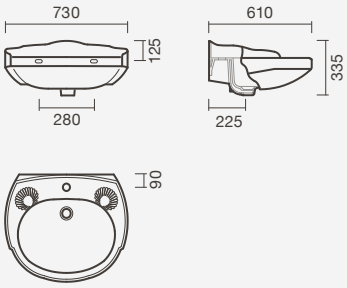

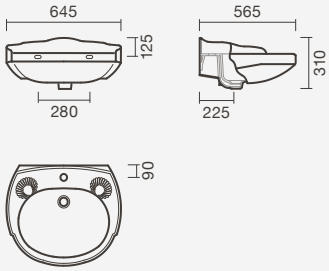

REGINA

Washbasin 61

605 × 490 × 225 mm

> wall-mounted application
> with tap hole (central to the bowl), with overflow
> compatible with Regina pedestal
> in the box: washbasin and fixing kit

Reference	Weight	Pieces per pallet	€
S100 8221 7200 001	19	28	•





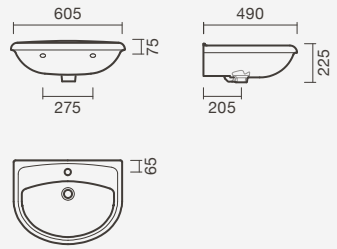

Recessed washbasins



ALUR 81 recessed washbasin with MAPLE 80 vanity unit in textured walnut, SCOPE washbasin faucet and KIN Round accessories

ALUR

NEW

Washbasin 121

1210 × 460 × 170mm

> recessed application (in countertop)
> with tap holes (central to the bowls), with overflows
> compatible with Willow Unik and Tahoe 120 vanity units
> in the box: washbasin

Reference	Weight	Pieces per pallet	€
S102 0830 0000 005	23	10	•





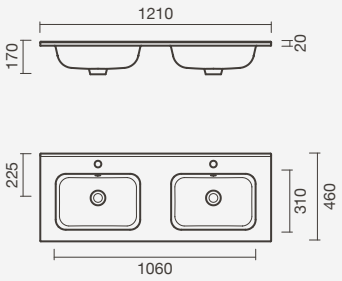

Washbasins 121, 101, 81, 71 and 61

> recessed application (in countertop)
> with tap hole (central to the bowl), with overflow
> compatible with Willow Unik and Tahoe vanity units
> in the box: washbasin

1210 x 460 x 170 mm	Weight	Pieces per pallet	€
S102 0830 0000 004	20	10	•
1010 x 460 x 170 mm			
S102 0830 0000 003	17	12	•
810 x 460 x 170 mm			
S102 0830 0000 002	16	18	•
710 x 460 x 170 mm			
S102 0830 0000 001	14	24	•
610 x 460 x 170 mm			
S102 0830 0000 000	12	24	•











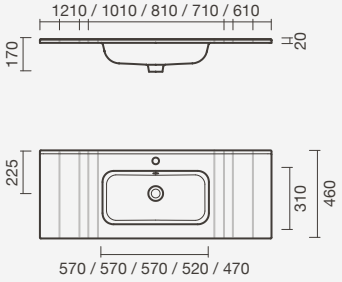

ALBUS

Washbasin 45

450 × 475 × 150mm

> semi-recessed application
> with tap hole (central to the bowl), with overflow
> in the box: washbasin

Reference	Weight	Pieces per pallet	€
S102 0101 7600 000	15	32	•





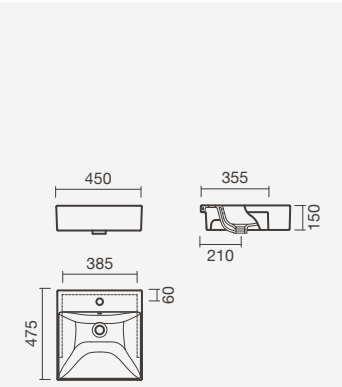

OVALO

Washbasin 64

635 × 390 × 140mm

> recessed application (in countertop)
> without tap hole, without overflow
> in the box: washbasin

Reference	Weight	Pieces per pallet	€
S100 6355 0400 000	12	32	•





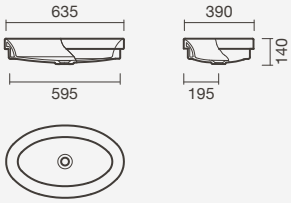

CIRCLE

Washbasin 40

395 × 395 × 140mm

> recessed application (in countertop)
> without tap hole, without overflow
> in the box: washbasin

Reference	Weight	Pieces per pallet	€
S100 6345 0400 000	7	48	•





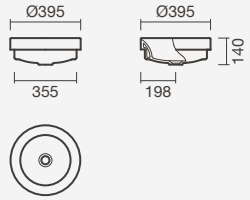

BE YOU

Washbasin 63

630 × 400 × 120mm

> recessed application (in countertop)
> with tap hole (to the right of the bowl), without overflow
> incompatible with cold start faucets
> in the box: washbasin

Reference	Weight	Pieces per pallet	€
S100 6221 6700 000	12	60	•





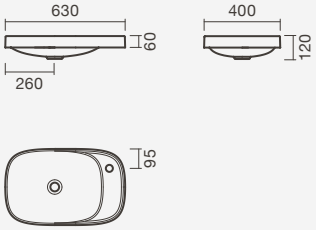

BE YOU

Washbasins 60 and 50

> recessed application (in countertop)
> with tap hole (central to the bowl), without overflow
> in the box: washbasin



600 x 460 x 120 mm	Weight	Pieces per pallet	€
S100 6211 6400 000	15	32	•
500 x 460 x 120 mm			
S100 6191 6400 000	12	32	•





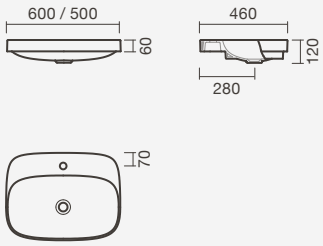

BE YOU

Washbasins 60 and 50

> recessed application (in countertop)
> without tap hole, without overflow
> in the box: washbasin



600 x 350 x 120 mm	Weight	Pieces per pallet	€
S100 6205 0400 000	10	32	•
500 x 350 x 120 mm			
S100 6185 0400 000	8	32	•





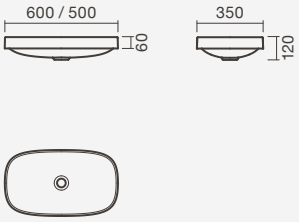

AIDA

Washbasin 55

545 × 430 × 157mm

> recessed application (under countertop)
> without tap hole, with overflow
> in the box: washbasin and fixing kit



Reference	Weight	Pieces per pallet	€
S100 6003 0500 000	10	32	•



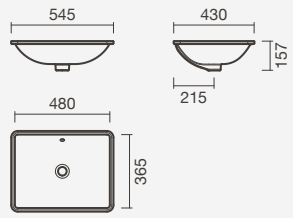

NEX

Washbasin 56

560 × 470 × 185mm

> recessed application (in countertop)
> with tap hole (central to the bowl), with overflow
> in the box: washbasin

Reference	Weight	Pieces per pallet	€
S100 7481 6400 000	13	32	•





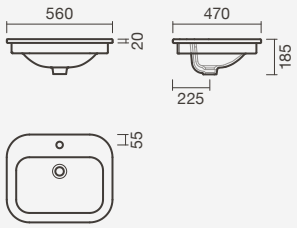

NEX

Washbasin 56

560 × 400 × 190mm

> recessed application (in or under countertop)
> without tap hole, with overflow
> in the box: washbasin and fixing kit

Reference	Weight	Pieces per pallet	€
S100 7473 0500 000	10	32	•





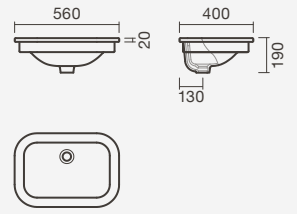

GRECIA

Washbasin 58

575 × 480 × 235mm

> recessed application (in countertop)
> with tap hole (central to the bowl), with overflow
> in the box: washbasin

Reference	Weight	Pieces per pallet	€
S100 6981 6400 000	11	32	•





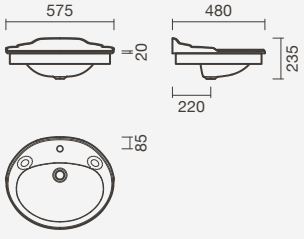

LUSO

Washbasin 57

565 x 480 x 215mm

> recessed application (in countertop)
> with tap hole (central to the bowl), with overflow
> in the box: washbasin

Reference	Weight	Pieces per pallet	€
S100 7201 6400 000	11	32	•





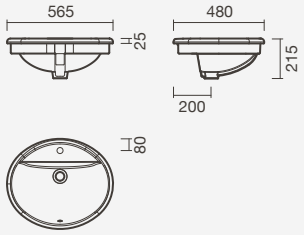

ANADIA

Washbasin 54

535 x 400 x 220mm

> recessed application (under countertop)
> without tap hole, with overflow
> in the box: washbasin and fixing kit

Reference	Weight	Pieces per pallet	€
S100 6063 0500 000	8	32	•





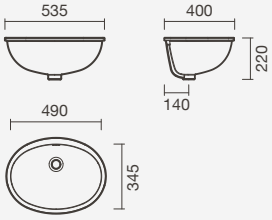

JARA

Washbasin 40

395 x 395 x 190mm

> recessed application (in countertop)
> without tap hole, with overflow
> in the box: washbasin

Reference	Weight	Pieces per pallet	€
S100 6415 0400 000	5	48	•





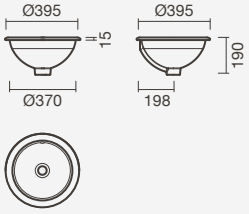


Shinrin-Yoku
Cedar wood & Black Pepper
HAND WASH



Faucets

Introduction

	Information	208
	Collection guide	210

Bathroom collections

	Moon	212
	Sun	216
	Silk	220
	Balance	228
	Orbis	238
	Loop	242
	Norm	246
	Selekt	250
	Prim	254
	Unic	258
N	Bloom	268
N	Viva	276
N	Scope	280
	Atlas 40	284
	Xs	288
	Grecia	290

Technical faucets

	Electronic	292
	Self-closing	296
	Shut-off valves	301
	Specific uses	302

Accessories

	Outlet wastes	303
N	Bottle traps	304

Kitchen collections

	Volt	307
	Stem	308
	Loop / Prim	310
N	Silk / Unic / Bloom	311
	Atlas 40 / Viva	312
	Xs	313

Faucets

Learn more about our faucet range

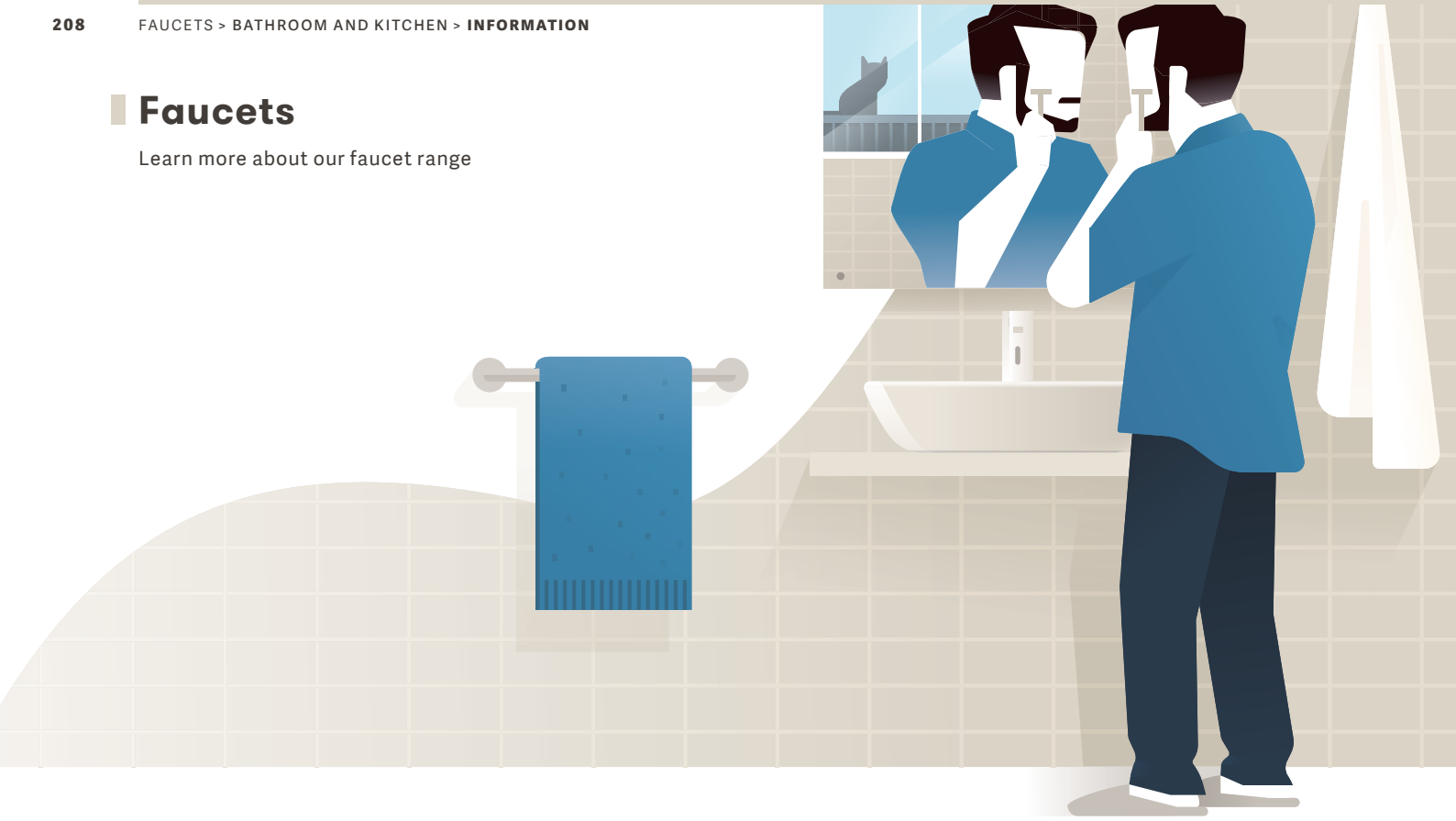

Details

Final touch

Find the right faucet

Today, more than ever, it is of most importance to design a home with emphasis on functionality and convenience, especially in the bathroom. Browse through our line of taps to find out how they can serve you.

Thermostatic

Safety and comfort

All the comfort with zero concern

Our expectations change accordingly to the phase we´re going through in our lives, but the need for comfort and safety remain. Learn about our thermostatic taps and invest in the future.



Thermostatic

When you get in the shower and someone else in the house opens a tap: the water turns boiling hot or ice cold and you have to adjust the temperature again with soap in your eyes? No more, with the help of a thermostatic tap! Turn on the tap and reach the perfect temperature within seconds – keeping that way – for a safer, more comfortable experience.

Available in the collections:
Balance · Silk · Unic · Bloom

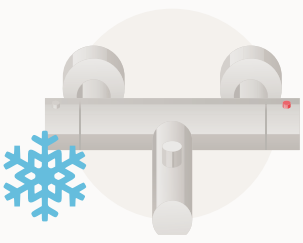

Cold Touch

Safety comes first and our cold touch technology proves it. It comes included in all thermostatic taps, allowing the temperature of the tap´s surface to never exceed the temperature of the shower. This safety measure is especially usefull for children, who aren´t always aware of the danger of a hot surface.

Available in the collections:
Balance · Silk · Unic · Bloom



Warranty

Quality

Safe choice

We know it is paramount to trust the products you have selected and therefore we are continuously invested in assuring quality. The trust in our products allows us to offer a warranty extension of 36 months for all our taps – a total of 5 years of assured quality.

Sustainability

Technologies

Less water and energy. Perfect flow.

Water is as essential as the air we breathe. Learn more about the technologies bellow that will allow not only to preserve precious resources as water, but also save on electricity.

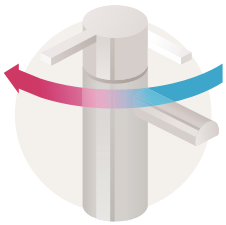

Cold Start

Our cold start technology gives you the option of saving energy with little effort: anytime you open the tap on the middle position only cold water will be activated. To turn the hot water on, you simply have to move the handle to the left and only then will the hot water be activated. This increment avoids that the piping receives hot water in vain, saving energy and reducing CO_2 emissions – diminishing the impact on the environment and on the wallet.

Available in the collections:
Moon · Sun · Balance · Orbis
Norm · Selekt · Loop · Prim
Bloom · Viva · Scope

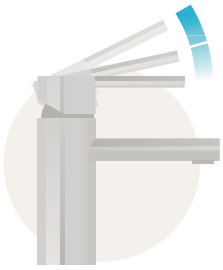

Eco-opening

A common tap pumps out about 12 litres of water per minute: do we really need that much water to wash our hands? By introducing eco-opening, the water consumption is reduced to half, without neglecting your comfort. The taps are equipped with a cartridge that breaks the movement of the handle into two pre-regulated positions: half open – 50% of the water flow; and fully open – the same flow as a conventional tap.

Available in the collections:
Moon · Sun · Silk · Balance · Orbis
Loop · Norm · Selekt · Prim · Unic
Bloom · Viva · Scope · Atlas 40

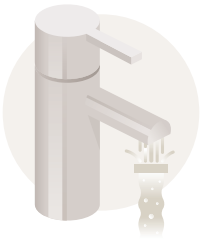

Ecological aerator

Air is abundant, but water is precious: learn more about a technology that allows you to take more advantage of water and at the same time reduce its consumption. An ecological aerator is a part that is integrated in the tap spout to enrich the water with air. The result is a more voluminous, precise and smooth water flow in which each water drop feels thicker, denser and lighter. The additional result is effortless water saving and a more comfortable use without spatter.

Available in the collections:
Moon · Sun · Balance · Orbis · Selekt
Norm · Unic · Bloom · Viva · Scope
XS · Eco-stop

Collection guide

Know our range of faucets



Moon
5 Models
Page 212



Sun
6 Models
Page 216



Silk
15 Models
Page 220



Balance
20 Models
Page 228



Orbis
9 Models
Page 238



Loop
9 Models
Page 242



Norm
9 Models
Page 246



Selekt
5 Models
Page 250

Washbasin								
> single lever	•	•	•	•	•	•	•	•
> single lever - cascade function								
> single lever - accessibility								
> single lever - recessed								
> single lever - short spout, recessed			•	•	•			
> single lever - long spout, recessed			•	•	•			
> single lever - high spout	•	•	•	•	•	•	•	•
> self-closing								
> self-closing - high spout								
> self-closing - recessed								
> electronic		•		•				
> electronic - recessed				•				
Bidet								
> single lever	•	•	•	•	•	•	•	•
> single lever - accessibility								
Shower								
> single lever	•	•	•	•	•	•	•	•
> single lever - accessibility								
> single lever - recessed								
> single lever - 1 function, recessed			•	•	•	•	•	
> single lever - shower system			•		•			
> thermostatic				•				
> thermostatic - shower system				•				
> thermostatic - 1 function, recessed			•					
> self-closing - recessed								
Shower / Bathtub								
> single lever - 2 functions, recessed			•	•	•	•	•	
> single lever - 3 functions, recessed			•	•				
> single lever - 4 functions, recessed			•	•				
> thermostatic - 2 functions, recessed			•	•				
> thermostatic - 3 functions, recessed			•	•				
> thermostatic - 4 functions, recessed			•	•				
Bathtub								
> single lever	•	•	•	•	•	•	•	•
> single lever - cascade function								
> single lever - recessed								
> single lever - high spout				•				
> thermostatic				•				
Urinal								
> self-closing - recessed								










	Prim 10 Models	**Unic** 22 Models	**Bloom** 16 Models	**Viva** 7 Models	**Scope** 6 Models	**Atlas 40** 4 Models	**XS** 4 Models	**Grecia** 4 Models
	Page 254	Page 258	Page 268	Page 276	Page 280	Page 284	Page 288	Page 290
Washbasin								
> single lever	•	•	•	•	•	•	•	•
> single lever - cascade function								
> single lever - accessibility		•		•				
> single lever - recessed	•							
> single lever - short spout, recessed		•						
> single lever - long spout, recessed		•						
> single lever - high spout	•	•	•					
> self-closing		•						
> self-closing - high spout		•						
> self-closing - recessed			•					
> electronic		•						
> electronic - recessed		•						
Bidet								
> single lever	•	•	•	•	•	•	•	•
> single lever - accessibility				•				
Shower								
> single lever	•	•	•	•	•	•	•	•
> single lever - accessibility				•				
> single lever - recessed								
> single lever - 1 function, recessed	•	•	•		•			
> single lever - shower system			•					
> thermostatic								
> thermostatic - shower system		•	•					
> thermostatic - 1 function, recessed		•						
> self-closing - recessed			•					
Shower / Bathtub								
> single lever - 2 functions, recessed	•	•	•		•			
> single lever - 3 functions, recessed		•						
> single lever - 4 functions, recessed		•						
> thermostatic - 2 functions, recessed		•						
> thermostatic - 3 functions, recessed		•	•					
> thermostatic - 4 functions, recessed		•						
Bathtub								
> single lever	•	•	•	•	•	•	•	•
> single lever - cascade function								
> single lever - recessed			•					
> single lever - high spout								
> thermostatic								
Urinal								
> self-closing - recessed			•					

Moon



MOON high spout single lever washbasin faucet

WASHBASIN

Single lever washbasin faucet

> for washbasins with a tap hole
> ceramic cartridge (ecological) and orientable aerator (ecological)
> cold start function
> in the box: faucet, flexible connections and fixing kit

Reference	Weight	€
S500 0501 2950 703	2	•



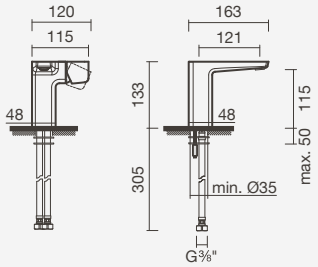

Single lever washbasin faucet (high spout)

> for washbasins without a tap hole
> ceramic cartridge (ecological) and orientable aerator (ecological)
> cold start function
> in the box: faucet, flexible connections and fixing kit

Reference	Weight	€
S500 0501 2950 711	3	•



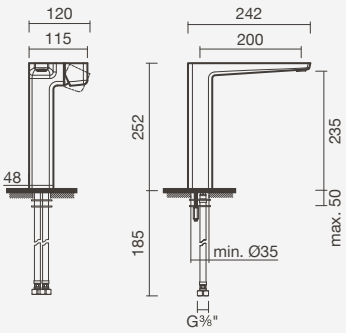

BIDET

Single lever bidet faucet

> for bidets with a tap hole
> ceramic cartridge (ecological) and orientable aerator (ecological)
> cold start function
> in the box: faucet, flexible connections and fixing kit

Reference	Weight	€
S500 0501 2950 701	2	•



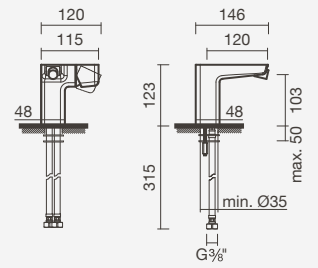

SHOWER

Single lever shower faucet

> for showers
> ceramic cartridge (ecological)
> flow restrictor integrated into the shower hose
> in the box: faucet, hand shower, shower holder, 175cm shower hose and fixing kit

Reference	Weight	€
S500 0506 6250 702	2	•



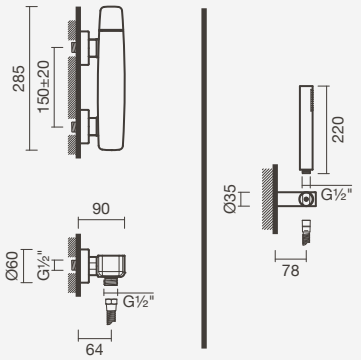

BATH

Single lever bath faucet

> for baths
> ceramic cartridge (ecological) and orientable aerator (ecological)
> flow restrictor integrated into the shower hose
> in the box: faucet, hand shower, shower holder, 175cm shower hose and fixing kit

Reference	Weight	€
S500 0506 6250 705	3	•



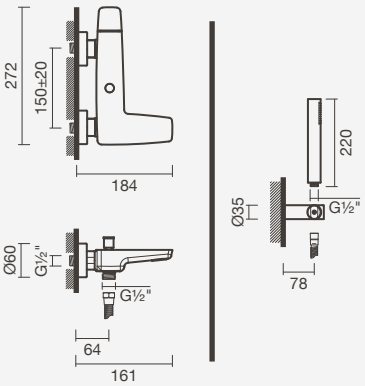



MOON single lever bath faucet

Sun



SUN single lever washbasin faucet with a matte black finish and EVEN 140 *solid surface* wall-mounted washbasin with basin on the right

WASHBASIN

Single lever washbasin faucet

> for washbasins with a tap hole
> ceramic cartridge (ecological) and non-orientable aerator (ecological)
> cold start function
> in the box: faucet, flexible connections and fixing kit







Chrome finish	Weight	€
S502 0455 0212 600	2	•
Matte black finish		
S502 0455 0271 600	2	•
Brushed finish		
S502 0455 0224 800	2	•

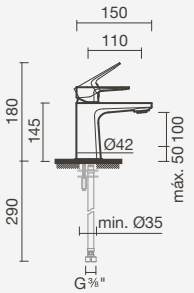

Single lever washbasin faucet (high spout)

> for washbasins without a tap hole
> ceramic cartridge (ecological) and non-orientable aerator (ecological)
> cold start function
> in the box: faucet, flexible connections and fixing kit







Chrome finish	Weight	€
S502 0451 2412 600	2	•
Matte black finish		
S502 0451 2471 600	2	•
Brushed finish		
S502 0451 2424 800	2	•

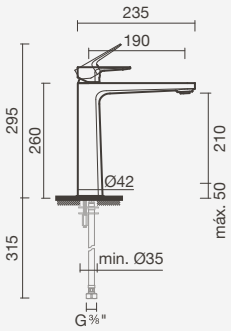

WASHBASIN





Electronic washbasin faucet

> for washbasins with a tap hole
> with solenoid valve and non-orientable aerator (ecological)
> activated by an infrared sensor
> powered by electric power (230V) or batteries (6V)
> in the box: faucet, electronic box, flexible connections and fixing kit

One water inlet - chrome finish	Weight	€
S502 0960 0012 600	2	•
One water inlet - matte black finish		
S502 0960 0071 600	2	•
One water inlet - gold finish		
S502 0960 0071 700	2	•

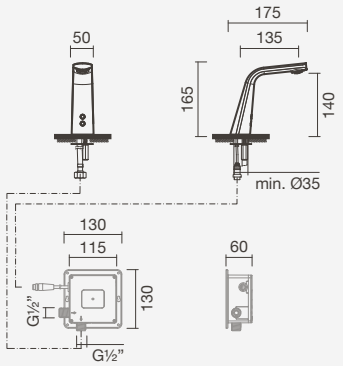

BIDET





Single lever bidet faucet

> for bidets with a tap hole
> ceramic cartridge (ecological) and orientable aerator (ecological)
> cold start function
> in the box: faucet, flexible connections and fixing kit

Chrome finish	Weight	€
S502 0465 0212 600	1	•
Matte black finish		
S502 0465 0271 600	1	•
Brushed finish		
S502 0465 0224 800	1	•

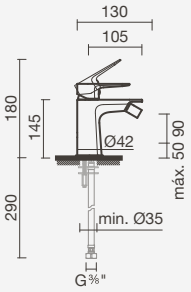

SHOWER





Single lever shower faucet

> for showers
> ceramic cartridge
> in the box: faucet, hand shower and 170cm shower hose

Chrome finish	Weight	€
S502 0476 6212 600	2	•
Matte black finish		
S502 0476 6271 600	2	•
Brushed finish		
S502 0476 6224 800	2	•

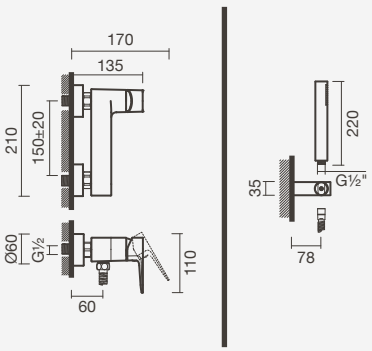

BATH

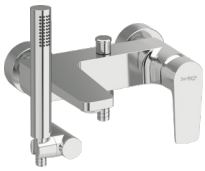



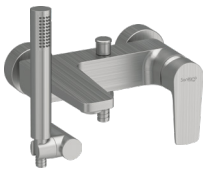

Single lever bath faucet

> for baths
> ceramic cartridge and non-orientable aerator (ecological)
> in the box: faucet, hand shower and 170cm shower hose

Chrome finish	Weight	€
S502 0486 6212 600	2	•
Matte black finish		
S502 0486 6271 600	2	•
Brushed finish		
S502 0486 6224 800	2	•

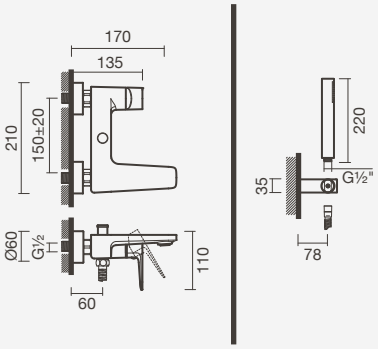



SUN electronic washbasin faucet with a gold finish and EVEN 160 *solid surface* wall-mounted washbasin

Silk



SILK single lever washbasin faucet

WASHBASIN



Single lever washbasin faucet

> for washbasins with a tap hole
> ceramic cartridge (ecological) and non-orientable aerator
> in the box: faucet, flexible connections and fixing kit

Reference	Weight	€
S500 0541 2750 703	1	•

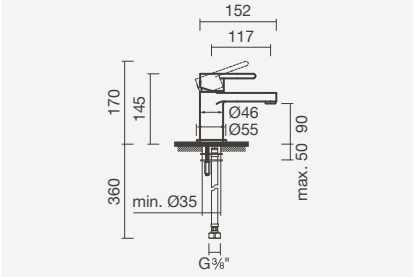



Single lever washbasin faucet (high spout)

> for washbasins without a tap hole
> ceramic cartridge (ecological) and non-orientable aerator
> in the box: faucet, flexible connections and fixing kit

Reference	Weight	€
S500 0541 2750 711	2	•

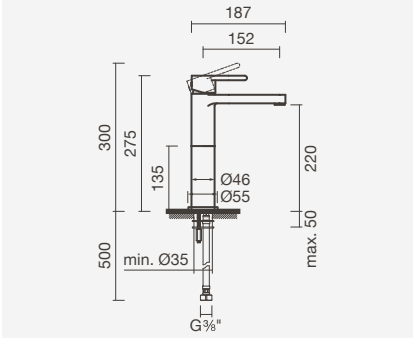



Single lever washbasin faucet

> for washbasins without a tap hole
> ceramic cartridge (ecological) and non-orientable aerator
> minimum installation depth: 50mm
> in the box: faucet and installation box

Long spout	Weight	€
S500 0541 0812 601	3	•
Short spout		
S500 0541 1012 601	2	•

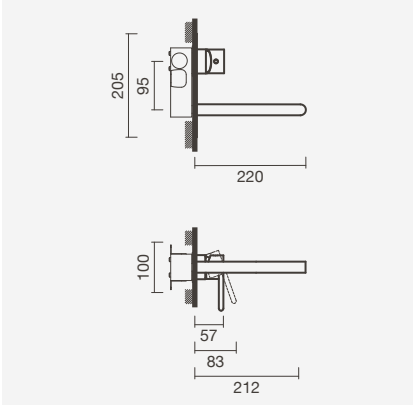



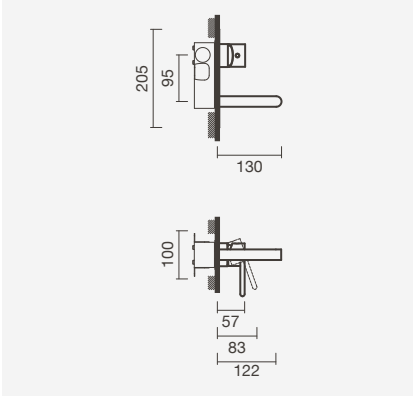

BIDET



Single lever bidet faucet

> for bidets with a tap hole
> ceramic cartridge (ecological) and orientable aerator
> in the box: faucet, flexible connections and fixing kit

Reference	Weight	€
S500 0541 2750 701	1	•

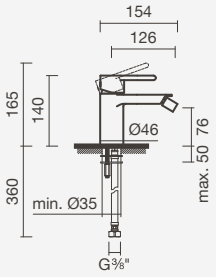

SHOWER



Single lever shower faucet

> for showers
> ceramic cartridge (ecological)
> in the box: faucet, hand shower, shower holder, 175cm shower hose and fixing kit

Reference	Weight	€
S500 0541 3850 702	1	•

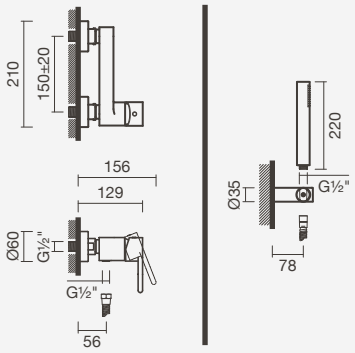

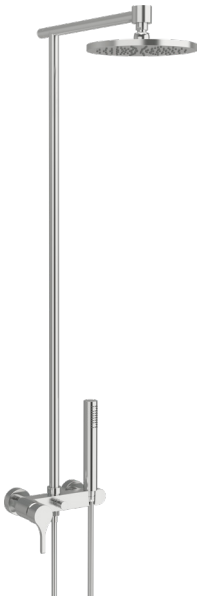

Shower system

> for showers (2 functions: hand and overhead shower - angle adjustable)
> ceramic cartridge (ecological)
> fixed shower system (non-adjustable height)
> in chromed brass
> in the box: shower system, overhead shower with Ø225mm, hand shower, fixed hand-shower support (built-in in the mixer body), 175cm shower hose and fixing kit

Reference	Weight	€
S500 0544 6150 700	5	•

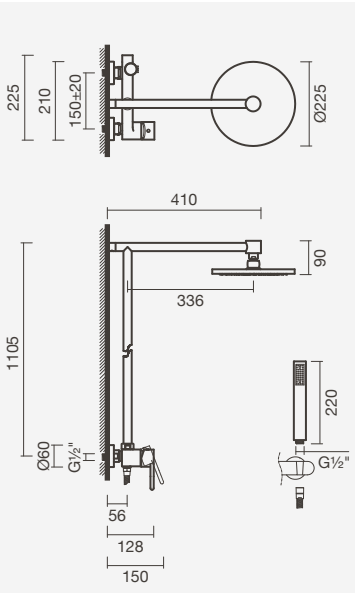



SILK shower system

SHOWER / BATH

Thermostatic shower faucet (1 function)

> for showers or baths (1 function)
> thermostatic cartridge (38º safe-stop)
> adjustable installation depth: 45 to 85mm
> in the box: faucet





Square rosette	Weight	€
S500 0546 9850 706	2	•
Round rosette		
S500 0546 9050 706	2	•



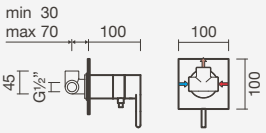

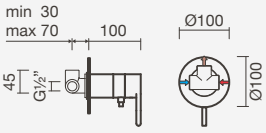

Thermostatic shower faucet (2 functions)

> for showers and/or baths (2 functions)
> thermostatic cartridge (38º safe-stop)
> adjustable installation depth: 60 to 75mm (horizontal rectangular rosette) and 55 to 85mm (vertical rectangular rosette and round rosette)
> in the box: faucet





Rectangular rosette (vertical)		
S500 0546 9950 706	2	•
Round rosette		
S500 0546 9150 706	2	•



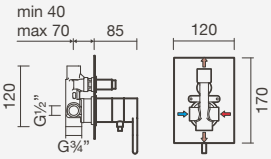

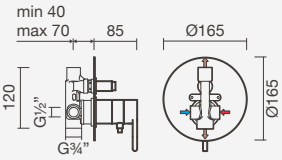

Thermostatic shower faucet (3 functions)

> for showers and/or baths (3 functions)
> thermostatic cartridge (38º safe-stop)
> adjustable installation depth: 45 to 75mm
> in the box: faucet





Rectangular rosette (vertical)	Weight	€
S500 0547 0050 706	2	•
Round rosettes		
S500 0546 9250 706	2	•



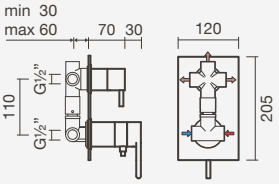

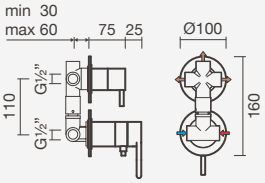

SHOWER / BATH



Thermostatic shower faucet (4 functions)

> for showers and/or baths (4 functions)
> thermostatic cartridge (38° safe-stop)
> adjustable installation depth: 60 to 75mm (horizontal rectangular rosette) and 45 to 75mm (vertical rectangular rosette and round rosettes)
> in the box: faucet

Rectangular rosette (vertical)		
S500 0547 0150 706	3	•
Round rosettes		
S500 0546 9350 706	3	•



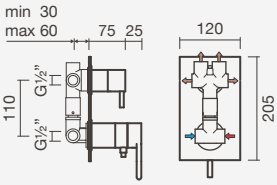

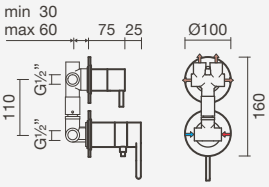

Single lever shower faucet (1 function)

> for showers or baths (1 function)
> ceramic cartridge
> adjustable installation depth: 45 to 75mm
> in the box: faucet

Square rosette	Weight	€
S500 0546 9450 706	1	•
Round rosette		
S500 0546 8650 706	1	•





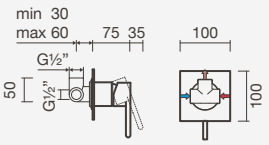

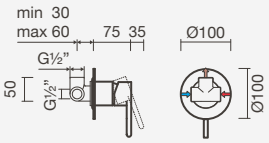

Single lever shower faucet (2 functions)

> for showers and/or baths (2 functions)
> ceramic cartridge
> adjustable installation depth: 60 to 75mm (horizontal rectangular rosette) and 55 to 75mm (vertical rectangular rosette and round rosette)
> in the box: faucet

Rectangular rosette (vertical)		
S500 0546 9550 706	2	•
Round rosette		
S500 0546 8750 706	2	•





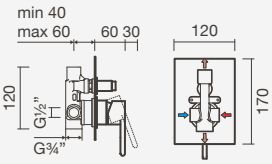

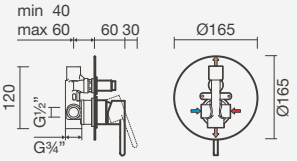

SHOWER / BATH



Single lever shower faucet (3 functions)

> for showers and/or baths (3 functions)
> ceramic cartridge
> adjustable installation depth: 45 to 75mm
> in the box: faucet

Rectangular rosette (vertical)	Weight	€
S500 0546 9650 706	2	•
Round rosettes		
S500 0546 8850 706	2	•



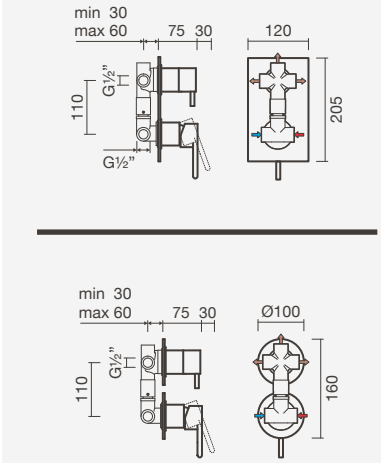

Single lever shower faucet (4 functions)

> for showers and/or baths (4 functions)
> ceramic cartridge
> adjustable installation depth: 60 to 70mm (horizontal rectangular rosette) and 45 to 75mm (vertical rectangular rosette and round rosettes)
> in the box: faucet

Rectangular rosette (vertical)	Weight	€
S500 0546 9750 706	3	•
Round rosettes		
S500 0546 8950 706	3	•





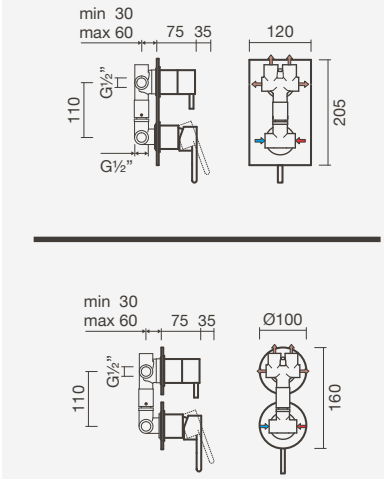

BATH



Single lever bath faucet

> for baths
> ceramic cartridge (ecological) and non-orientable aerator
> in the box: faucet, hand shower, shower holder, 175cm shower hose and fixing kit

Reference	Weight	€
S500 0541 3850 705	2	•

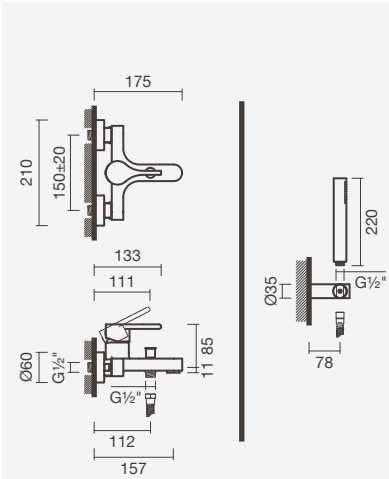



SILK single lever bath faucet

Balance



BALANCE thermostatic shower system

WASHBASIN



Single lever washbasin faucet

> for washbasins with a tap hole
> ceramic cartridge (ecological) and non-orientable aerator (ecological)
> cold start function
> in the box: faucet, flexible connections and fixing kit

Reference	Weight	€
S500 0401 2950 703	2	•

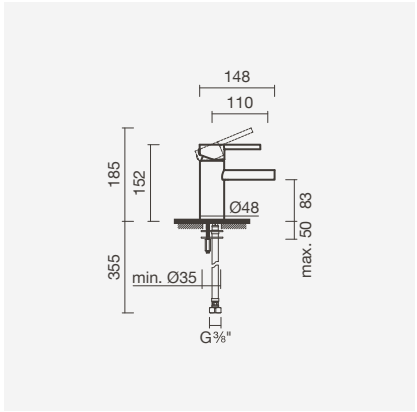



Single lever washbasin faucet

> for washbasins with a tap hole
> ceramic cartridge (ecological) and non-orientable aerator (ecological)
> cold start function
> in the box: faucet, flexible connections and fixing kit

Reference	Weight	€
S500 0401 2950 711	2	•

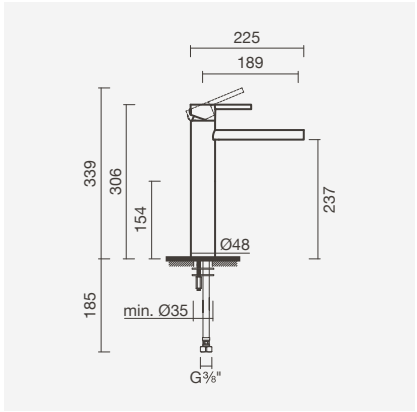



Single lever washbasin faucet

> for washbasins without a tap hole
> ceramic cartridge (ecological) and non-orientable aerator (ecological)
> minimum installation depth: 90mm
> in the box: faucet, installation box, flexible connections and fixing kit

Long spout	Weight	€
S500 0401 0712 600	2	•
Short spout		
S500 0401 0912 600	2	•

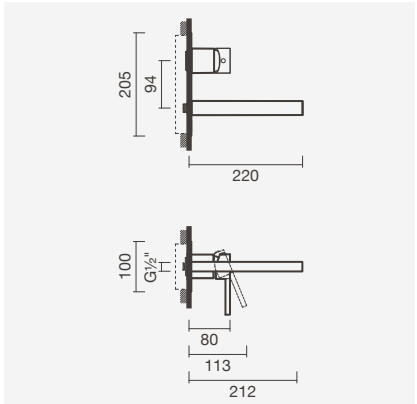



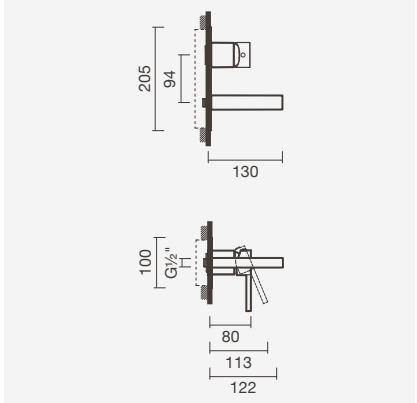

WASHBASIN

Electronic washbasin faucet

> for washbasins with a tap hole
> with solenoid valve and non-orientable aerator (ecological)
> activated by an infrared sensor
> powered by electric power (220V) or batteries (1.5V)
> in the box: faucet, electronic box, hidden mixing device, flexible connections and fixing kit

Mixed water inlet	Weight	€
S500 0402 9350 703	1	•



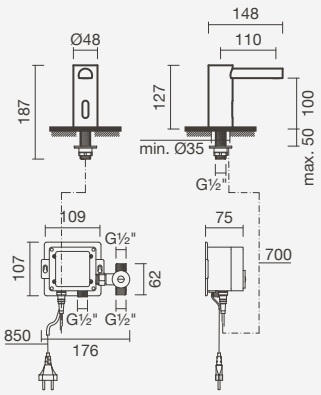

Electronic washbasin faucet

> for washbasins without a tap hole
> with solenoid valve and non-orientable aerator (ecological)
> activated by an infrared sensor
> powered by electric power (220V) or batteries (1.5V)
> in the box: faucet, electronic box, hidden mixing device, flexible connections and fixing kit

Mixed water inlet	Weight	€
S500 8952 9450 700	2	•



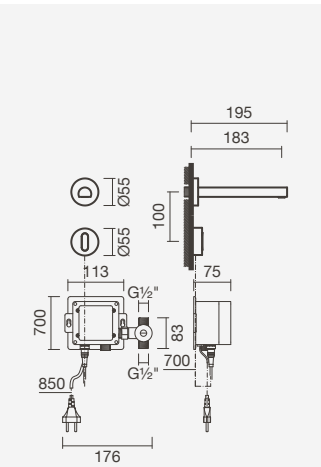

Electronic washbasin faucet

> for washbasins without a tap hole
> with solenoid valve and non-orientable aerator (ecological)
> activated by an infrared sensor
> powered by electric power (220V) or batteries (1.5V)
> in the box: faucet, electronic box, flexible connections and fixing kit

One water inlet	Weight	€
S500 8942 9350 700	2	•



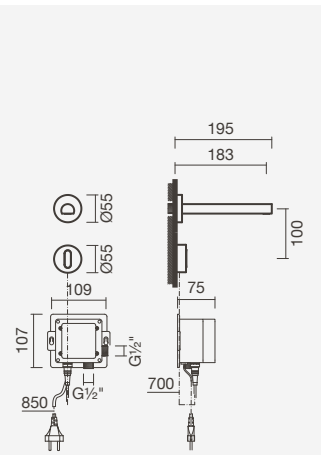

BIDET

Single lever bidet faucet

> for bidets with a tap hole
> ceramic cartridge and orientable aerator (ecological)
> cold start function
> in the box: faucet, flexible connections and fixing kit

Reference	Weight	€
S500 0401 2950 701	2	•



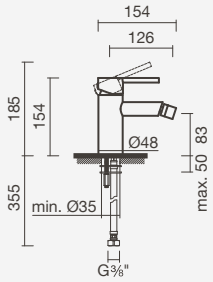

ECO COLD START



BALANCE single lever bidet faucet with GLAM floor-standing BTW bidet

SHOWER



Thermostatic shower faucet

> for showers
> thermostatic cartridge (38º safe-stop)
> in the box: faucet, hand shower, shower holder, 175cm shower hose and fixing kit

Reference	Weight	€
S500 0401 3850 702	3	•

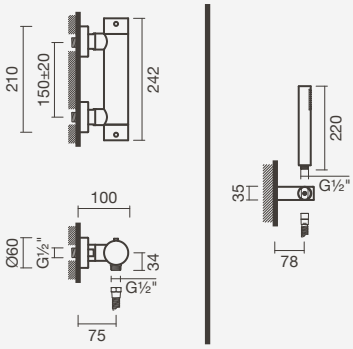



Single lever shower faucet

> for showers
> ceramic cartridge (ecological)
> cold start function
> in the box: faucet, hand shower, shower holder, 175cm shower hose and fixing kit

Reference	Weight	€
S500 0401 3750 702	3	•

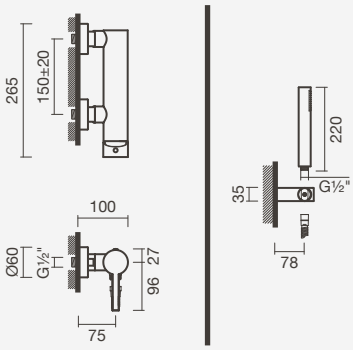



Thermostatic shower system

> for showers (2 functions: hand and overhead shower - angle adjustable)
> thermostatic cartridge (38º safe-stop)
> fixed shower system (non-adjustable height)
> in chromed brass
> in the box: shower system, overhead shower with Ø200mm, hand shower, 2 hand-shower supports (fixed and/or orientable and adjustable in height), 175cm shower hose and fixing kit

Reference	Weight	€
S500 0404 6050 709	6	•

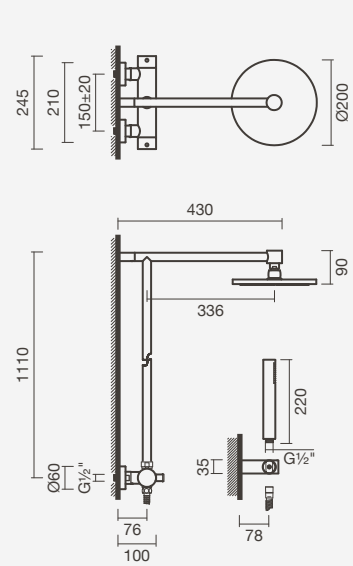

SHOWER / BATH





Thermostatic shower faucet (2 functions)

> for showers and/or baths (2 functions)
> thermostatic cartridge (38° safe-stop)
> adjustable installation depth: 60 to 75mm (horizontal rectangular rosette) and 55 to 85mm (vertical rectangular rosette and round rosette)
> in the box: faucet

Rectangular rosette (vertical)		
S500 0406 9950 700	2	•
Round rosette		
S500 0406 9150 700	2	•



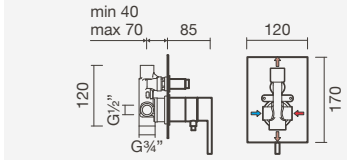

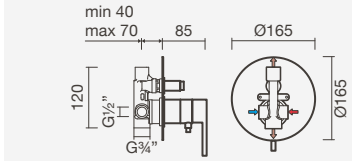



BALANCE single lever shower faucet

SHOWER / BATH



Single lever shower faucet (3 functions)

> for showers and/or baths (3 functions)
> thermostatic cartridge (38° safe-stop)
> adjustable installation depth: 45 to 75mm
> in the box: faucet

Rectangular rosette (vertical)	Weight	€
S500 0407 0050 700	2	•
Round rosettes		
S500 0406 9250 700	2	•





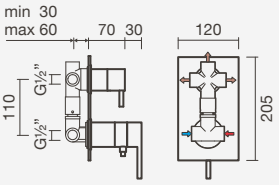

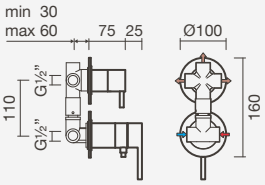



Single lever shower faucet (4 functions)

> for showers and/or baths (4 functions)
> thermostatic cartridge (38° safe-stop)
> adjustable installation depth: 60 to 75mm (horizontal rectangular rosette) and 45 to 75mm (vertical rectangular rosette and round rosettes)
> in the box: faucet

Rectangular rosette (vertical)		
S500 0407 0150 700	3	•
Round rosettes		
S500 0406 9350 700	3	•





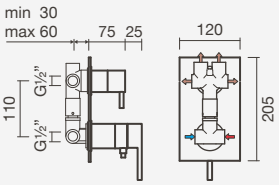

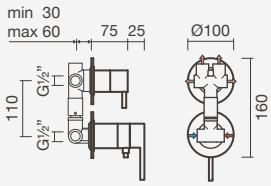



Single lever shower faucet (1 function)

> for showers or baths (1 function)
> ceramic cartridge
> adjustable installation depth: 45 to 75mm
> in the box: faucet

Square rosette	Weight	€
S500 0406 9450 700	1	•
Round rosette		
S500 0406 8650 700	1	•



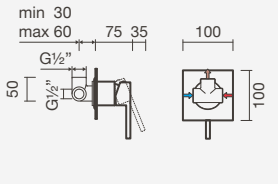

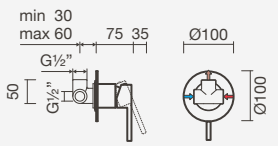

SHOWER / BATH

Single lever shower faucet (2 functions)

> for showers and/or baths (2 functions)
> ceramic cartridge
> adjustable installation depth: 60 to 75mm (horizontal rectangular rosette) and 55 to 75mm (rectangular rosette - vertical and round rosette)
> in the box: faucet



Rectangular rosette (vertical)

S500 0406 9550 700	2	•

Round rosette

S500 0406 8750 700	2	•



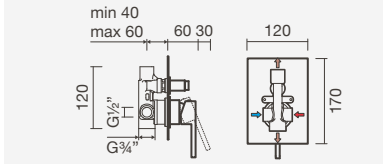

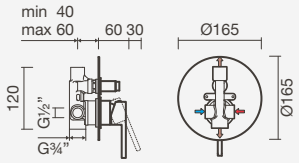

Single lever shower faucet (3 functions)

> for showers and/or baths (3 functions)
> ceramic cartridge
> adjustable installation depth: 45 to 75mm
> in the box: faucet



Rectangular rosette (vertical)	Weight	€
S500 0406 9650 700	2	•
Round rosettes		
S500 0406 8850 700	2	•



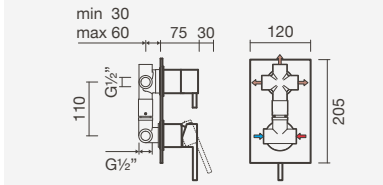

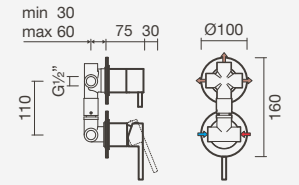

Single lever shower faucet (4 functions)

> for showers and/or baths (4 functions)
> ceramic cartridge
> adjustable installation depth: 60 to 75mm (horizontal rectangular rosette) and 45 to 75mm (vertical rectangular rosette and round rosettes)
> in the box: faucet



Rectangular rosette (vertical)

S500 0406 9750 700	3	•

Round rosettes

S500 0406 8950 700	3	•



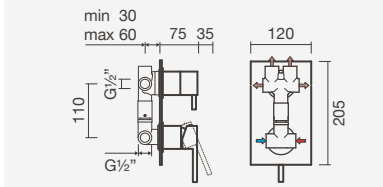

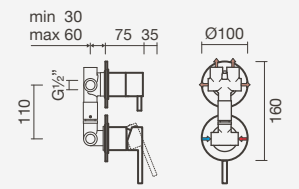

BATH



Thermostatic bath faucet

> for baths
> thermostatic cartridge (38º safe-stop) and non-orientable aerator
> in the box: faucet, hand shower, shower holder, 175cm shower hose and fixing kit

Reference	Weight	€
S500 0407 8150 705	3	•



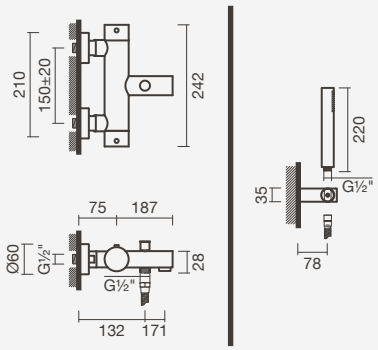



Single lever bath faucet

> for baths
> ceramic cartridge (ecological) and non-orientable aerator
> cold start function
> in the box: faucet, hand shower, shower holder, 175cm shower hose and fixing kit

Reference	Weight	€
S500 0401 3850 705	4	•



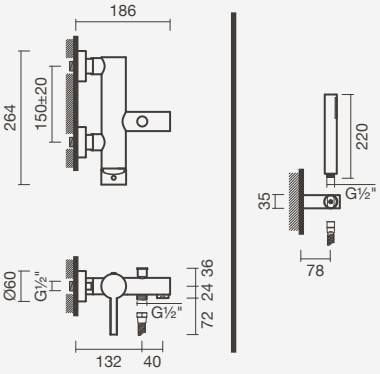

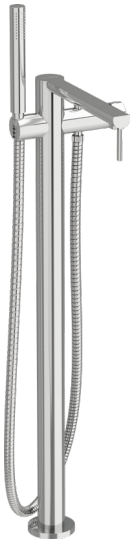

Single lever bath faucet (floor-mounted)

> for baths
> ceramic cartridge (ecological) and non-orientable aerator
> requires the pre-installation of water connections
> in the box: faucet, hand shower, 175cm shower hose and fixing kit

Reference	Weight	€
S500 0401 3750 708	13	•



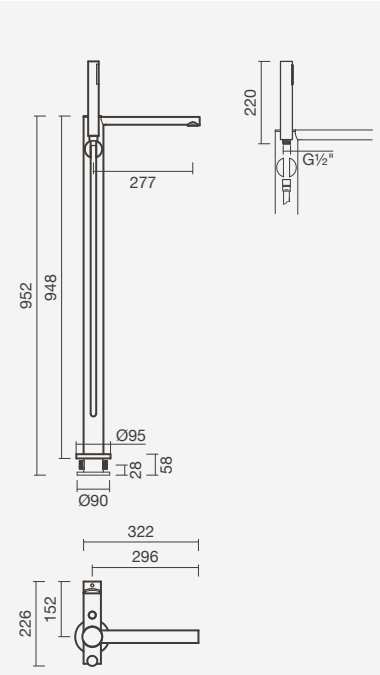



BALANCE thermostatic bath faucet

Orbis



ORBIS high spout single lever washbasin faucet

WASHBASIN



Single lever washbasin faucet

> for washbasins with a tap hole
> ceramic (ecological) cartridge and non-orientable aerator (ecological)
> cold start function
> in the box: faucet, flexible connections and fixing kit

Reference	Weight	€
S502 0041 2912 600	1	•

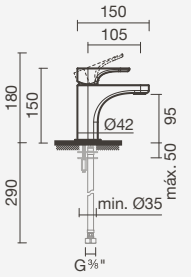



Single lever washbasin faucet (high spout)

> for washbasins without a tap hole
> ceramic (ecological) cartridge and non-orientable aerator (ecological)
> cold start function
> in the box: faucet, flexible connections and fixing kit

Reference	Weight	€
S502 0081 2912 600	2	•

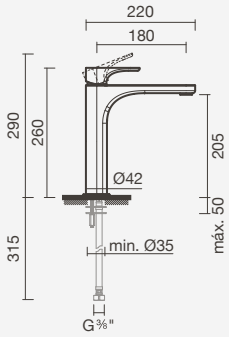



Single lever washbasin faucet

> for washbasins without a tap hole
> ceramic (ecological) cartridge and non-orientable aerator (ecological)
> adjustable installation depth: 50 to 75mm
> cold start function
> in the box: faucet

Long spout	Weight	€
S502 0161 0812 600	3	•
Short spout		
S502 0171 1012 600	2	•

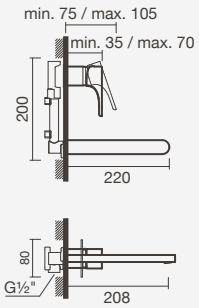

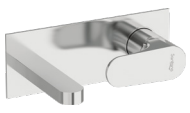

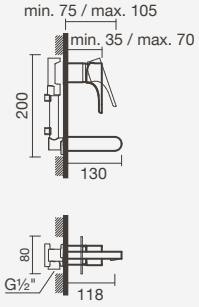

BIDET



Single lever bidet faucet

> for bidets with a tap hole
> ceramic (ecological) cartridge and orientable aerator (ecological)
> cold start function
> in the box: faucet, flexible connections and fixing kit

Reference	Weight	€
S502 0051 2912 600	1	•

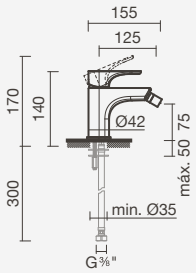

SHOWER



Single lever shower faucet

> for showers
> ceramic cartridge
> flow restrictor integrated into the shower hose
> in the box: faucet, hand shower, shower holder, 175cm shower hose and fixing kit

Reference	Weight	€
S502 0066 6212 600	2	•

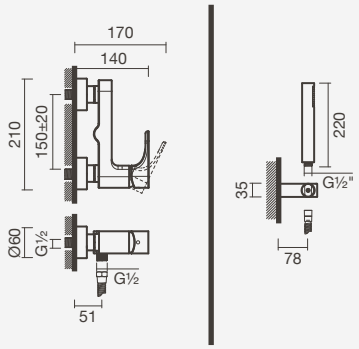

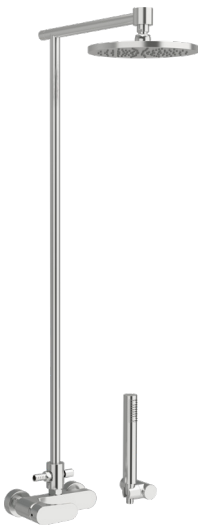

Shower system

> for showers (2 functions: hand and overhead shower - angle adjustable)
> ceramic cartridge
> fixed shower system (non-adjustable height)
> in chromed brass
> in the box: shower system, overhead shower with Ø220mm, hand shower, fixed hand-shower support, 175cm shower hose and fixing kit

Reference	Weight	€
S502 0114 5912 600	6	•

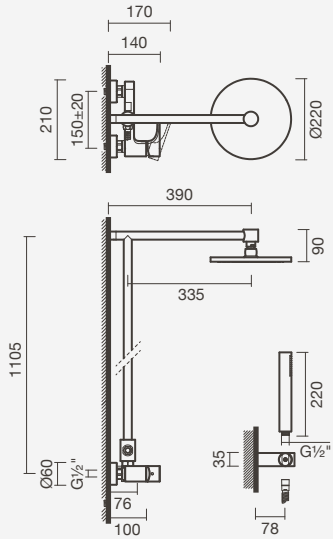

SHOWER / BATH





Single lever shower faucet (1 function)

> for showers or baths (1 function)
> ceramic cartridge
> adjustable installation depth: 45 to 75mm
> in the box: faucet

Square rosette	Weight	€
S502 0136 9412 600	1	•
Round rosette		
S502 0126 8612 600	1	•

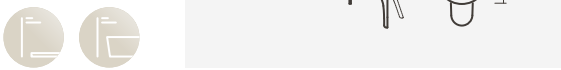

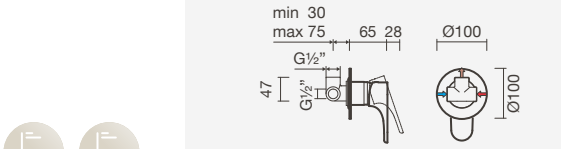





Single lever shower faucet (2 functions)

> for showers and/or baths (2 functions)
> ceramic cartridge
> adjustable installation depth: 55 to 75mm
> in the box: faucet

Rectangular rosette (vertical)	Weight	€
S502 0156 9512 600	2	•
Round rosette		
S502 0146 8712 600	2	•

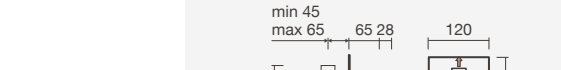

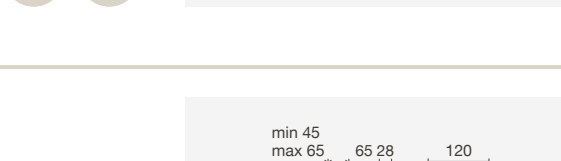

BATH



Single lever bath faucet

> for baths
> ceramic cartridge and non-orientable aerator
> flow restrictor integrated into the shower hose
> in the box: faucet, hand shower, shower holder, 175cm shower hose and fixing kit

Reference	Weight	€
S502 0076 6212 600	2	•

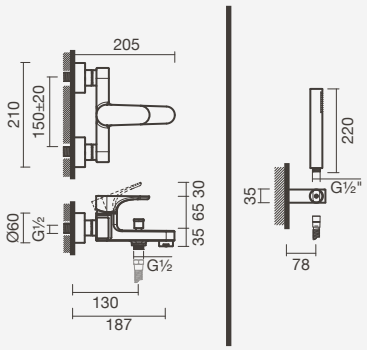

Loop



LOOP single lever washbasin faucet

WASHBASIN

Single lever washbasin faucet

> for washbasins with a tap hole
> ceramic cartridge (ecological) and non-orientable aerator
> cold start function
> in the box: faucet, flexible connections and fixing kit

Reference	Weight	€
S502 0811 2912 600	1	•



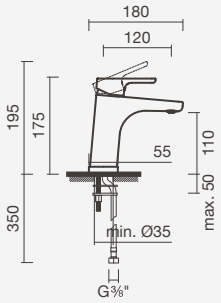

Single lever washbasin faucet (high spout)

> for washbasins without a tap hole
> ceramic cartridge (ecological) and non-orientable aerator
> cold start function
> in the box: faucet, flexible connections and fixing kit

Reference	Weight	€
S502 0811 2912 601	2	•



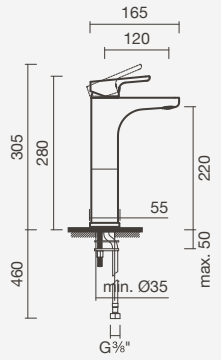

BIDET

Single lever bidet faucet

> for bidets with a tap hole
> ceramic cartridge (ecological) and non-orientable aerator
> in the box: faucet, flexible connections and fixing kit

Reference	Weight	€
S502 0820 0012 600	1	•



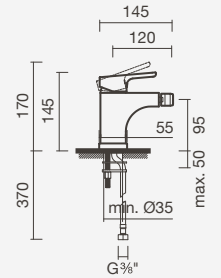

SHOWER



Single lever shower faucet

> for shower
> ceramic cartridge
> flow restrictor integrated into the shower hose
> in the box: faucet, handheld shower with 2 shower functions, shower holder, 170cm shower hose and fixing kit

Reference	Weight	€
S502 0940 0012 600	2	•

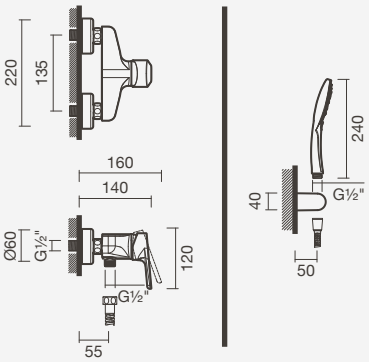

SHOWER / BATH



Single lever shower faucet (1 function)

> for shower or bath (1 function)
> ceramic cartridge
> with *smartbox*
> in the box: faucet and installation box

Reference	Weight	€
S502 0946 9412 601	1	•

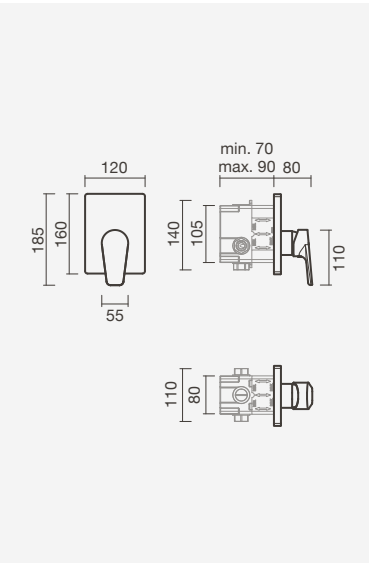

Single lever shower faucet (1 function)

> for shower or bath (1 function)
> ceramic cartridge
> in the box: faucet

Reference	Weight	€
S502 0946 9412 600	1	•



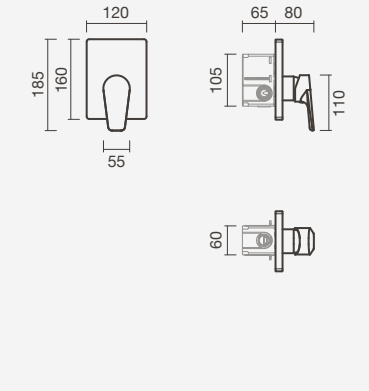

SHOWER / BATH

Single lever shower faucet (2 functions)

> for shower and/or bath (2 functions)
> ceramic cartridge
> with *smartbox*
> in the box: faucet and installation box



Reference	Weight	€
S502 0946 9512 601	1	•

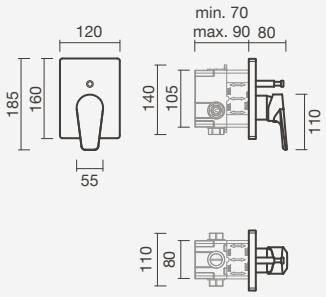

Single lever shower faucet (2 functions)

> for shower and/or bath (2 functions)
> ceramic cartridge
> in the box: faucet



Reference	Weight	€
S502 0946 9512 600	1	•

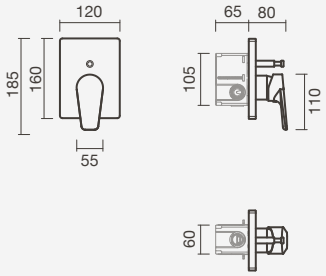

BATH

Single lever bath faucet

> for baths
> ceramic cartridge
> flow restrictor integrated into the shower hose
> in the box: faucet, handheld shower with 2 shower functions, shower holder, 170cm shower hose and fixing kit



Reference	Weight	€
S502 0920 0012 600	2	•

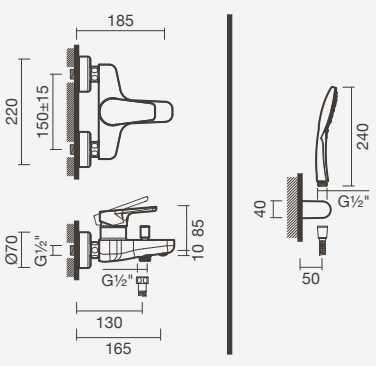

Norm



NORM high spout single lever washbasin faucet

WASHBASIN

Single lever washbasin faucet

> for washbasins with a tap hole
> ceramic cartridge (ecological) and non-orientable aerator
> cold start function
> in the box: faucet, flexible connections and fixing kit

Reference	Weight	€
S502 0861 2912 600	1	•



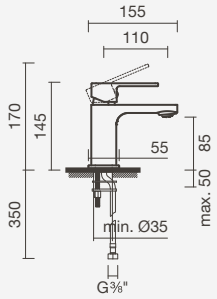

Single lever washbasin faucet (high spout)

> for washbasins without a tap hole
> ceramic cartridge (ecological) and non-orientable aerator
> cold start function
> in the box: faucet, flexible connections and fixing kit

Reference	Weight	€
S502 0861 2912 601	2	•

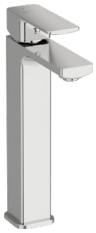

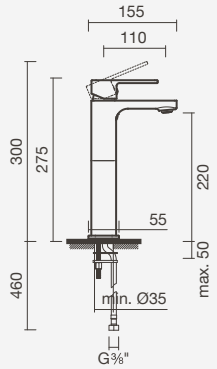

BIDET

Single lever bidet faucet

> for bidets with a tap hole
> ceramic cartridge (ecological) and orientable aerator
> in the box: faucet, flexible connections and fixing kit

Reference	Weight	€
S502 0870 0012 600	1	•



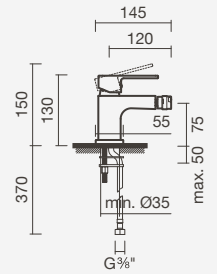

SHOWER



Single lever shower faucet

> for shower
> ceramic cartridge
> flow restrictor integrated into the shower hose
> in the box: faucet, handheld shower with 2 shower functions, shower holder, 170cm shower hose and fixing kit

Reference	Weight	€
S502 0950 0012 600	2	•

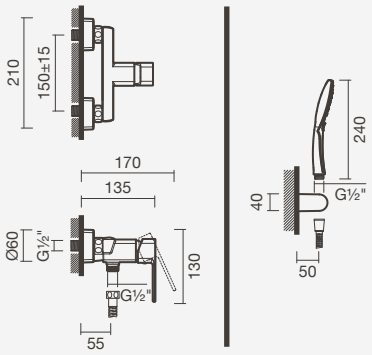

SHOWER / BATH



Single lever shower faucet (1 function)

> for shower or bath (1 function)
> ceramic cartridge
> with *smartbox*
> in the box: faucet and installation box

Reference	Weight	€
S502 0956 9412 601	1	•

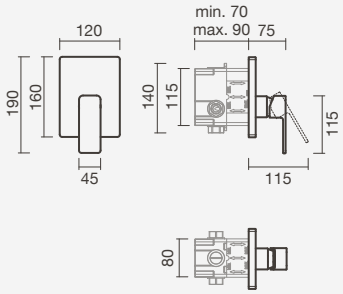

Single lever shower faucet (1 function)

> for shower or bath (1 function)
> ceramic cartridge
> in the box: faucet

Reference	Weight	€
S502 0956 9412 600	1	•



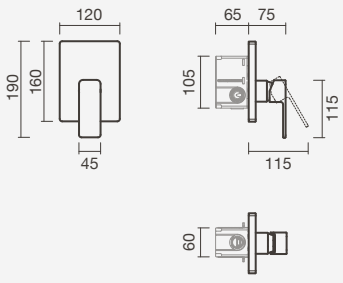

SHOWER / BATH

Single lever shower faucet (2 functions)

> for shower and/or bath (2 functions)
> ceramic cartridge
> with *smartbox*
> in the box: faucet and installation box



Reference	Weight	€
S502 0956 9512 601	1	•

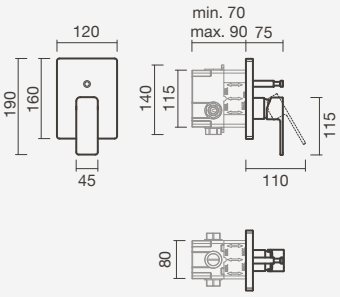

Single lever shower faucet (2 functions)

> for shower and/or bath (2 functions)
> ceramic cartridge
> in the box: faucet



Reference	Weight	€
S502 0956 9512 600	1	•

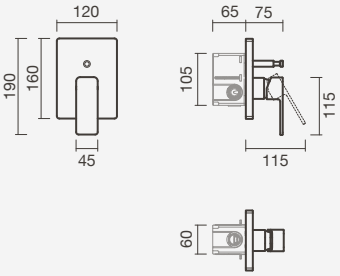

BATH

Single lever bath faucet

> for baths
> ceramic cartridge
> flow restrictor integrated into the shower hose
> in the box: faucet, handheld shower with 2 shower functions, shower holder, 170cm shower hose and fixing kit



Reference	Weight	€
S502 0910 0012 600	2	•

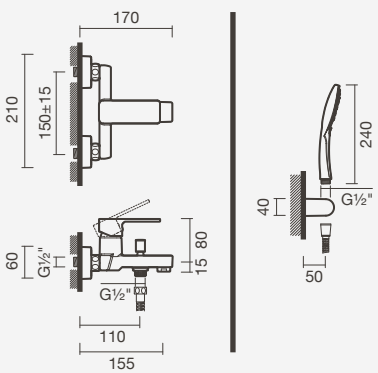

Selekt



SELEKT single lever washbasin faucet

WASHBASIN

Single lever washbasin faucet

> for washbasins with a tap hole
> ceramic (ecological) cartridge and non-orientable aerator (ecological)
> cold start function
> coin slot aerator
> in the box: faucet, flexible connections and fixing kit





Chrome finish	Weight	€
S500 0531 3350 703	1	•
Matte black finish		
S500 0531 3371 603	1	•

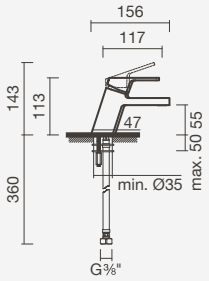

Single lever washbasin faucet (high spout)

> for washbasins without a tap hole
> ceramic (ecological) cartridge and non-orientable aerator (ecological)
> cold start function
> coin slot aerator
> in the box: faucet, flexible connections and fixing kit





Chrome finish	Weight	€
S500 0531 3312 600	2	•
Matte black finish		
S500 0531 3371 600	2	•

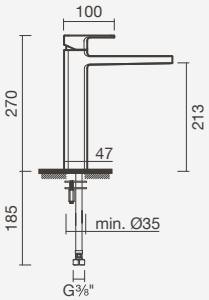

BIDET

Single lever bidet faucet

> for bidets with a tap hole
> ceramic (ecological) cartridge and orientable aerator (ecological)
> cold start function
> coin slot aerator
> in the box: faucet, flexible connections and fixing kit





Chrome finish	Weight	€
S500 0531 3350 701	1	•
Matte black finish		
S500 0531 3371 601	1	•

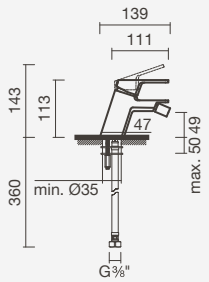

SHOWER





Single lever shower faucet

> for showers
> ceramic cartridge
> flow restrictor integrated into the shower hose
> in the box: faucet, hand shower, shower holder, 175cm shower hose and fixing kit

Chrome finish	Weight	€
S500 0531 3850 702	2	•
Matte black finish		
S500 0531 3871 602	2	•

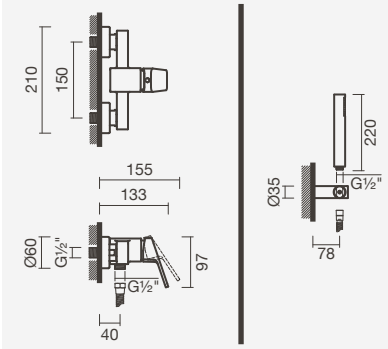

BATH





Single lever bath faucet

> for baths
> ceramic cartridge and non-orientable aerator
> flow restrictor integrated into the shower hose
> in the box: faucet, hand shower, shower holder, 175cm shower hose and fixing kit

Chrome finish	Weight	€
S500 0531 3850 705	2	•
Matte black finish		
S500 0531 3871 605	2	•

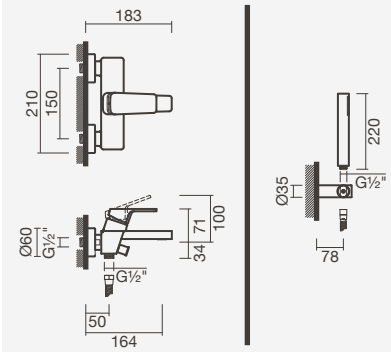



SELEKT single lever shower faucet



SELEKT single lever bath faucet

Prim



PRIM single lever washbasin faucet

WASHBASIN



Single lever washbasin faucet

> for washbasins with a tap hole
> ceramic cartridge (ecological) and non-orientable aerator
> in the box: faucet, flexible connections and fixing kit

Reference	Weight	€
S502 0831 2912 600	1	•

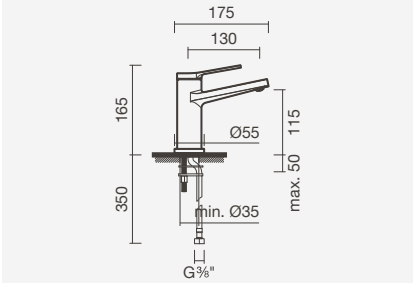



Single lever washbasin faucet (high spout)

> for washbasins without a tap hole
> ceramic cartridge (ecological) and non-orientable aerator
> in the box: faucet, flexible connections and fixing kit

Reference	Weight	€
S502 0831 2912 601	2	•

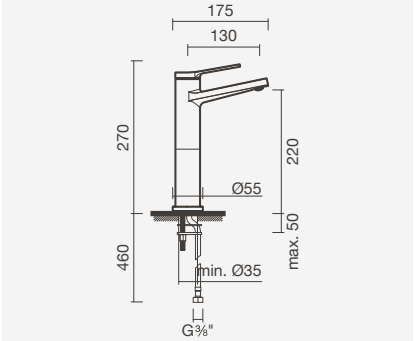



Single lever washbasin faucet (recessed)

> for washbasins without a tap hole
> ceramic cartridge (ecological) and non-orientable aerator
> with *smartbox*
> in the box: faucet and installation box

Reference	Weight	€
S502 0831 0712 602	2	•

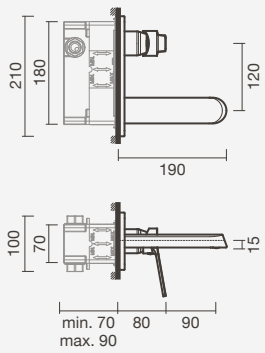

BIDET



Single lever bidet faucet

> for bidets with a tap hole
> ceramic cartridge (ecological) and orientable aerator
> in the box: faucet, flexible connections and fixing kit

Reference	Weight	€
S502 0840 0012 600	1	•

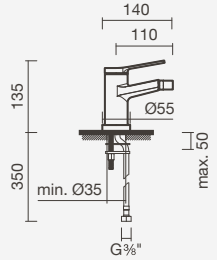

SHOWER



Torneira monocomando para duche

> for shower
> ceramic cartridge
> flow restrictor integrated into the shower hose
> in the box: faucet, handheld shower with 2 shower functions, shower holder, 170cm shower hose and fixing kit

Reference	Weight	€
S502 0930 0012 600	2	•

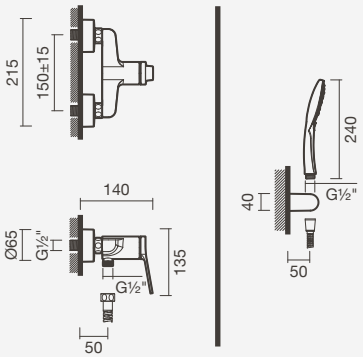

SHOWER / BATH



Single lever shower faucet (1 function)

> for shower or bath (1 function)
> ceramic cartridge
> with *smartbox*
> in the box: faucet and installation box

Reference	Weight	€
S502 0936 9412 601	1	•

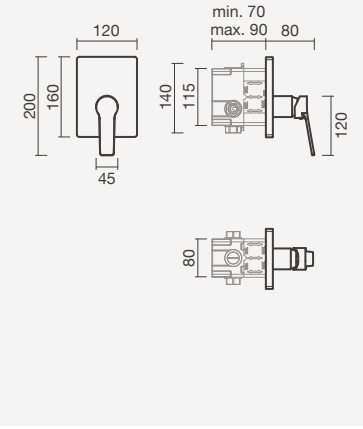

Single lever shower faucet (1 function)

> for shower or bath (1 function)
> ceramic cartridge
> in the box: faucet

Reference	Weight	€
S502 0936 9412 600	1	•



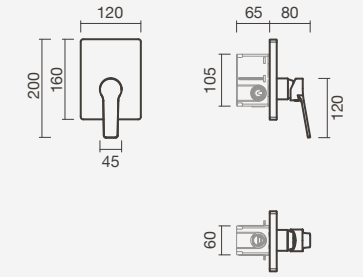

SHOWER / BATH

Single lever shower faucet (2 functions)

> for shower and/or bath (2 functions)
> ceramic cartridge
> with *smartbox*
> in the box: faucet and installation box



Reference	Weight	€
S502 0936 9512 601	1	•

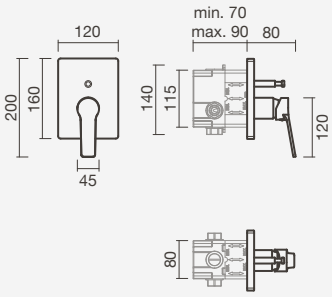

Single lever shower faucet (2 functions)

> for shower and/or bath (2 functions)
> ceramic cartridge
> in the box: faucet



Reference	Weight	€
S502 0936 9512 600	1	•

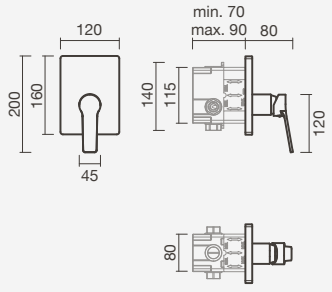

BATH

Single lever bath faucet

> for baths
> ceramic cartridge
> flow restrictor integrated into the shower hose
> in the box: faucet, handheld shower with 2 shower functions, shower holder, 170cm shower hose and fixing kit



Reference	Weight	€
S502 0900 0012 600	2	•

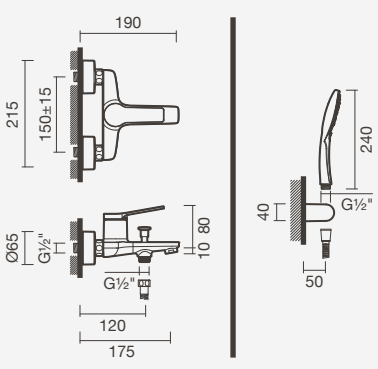

Unic



UNIC high spout single lever washbasin faucets with ARENA 70 countertop washbasins

WASHBASIN



Single lever washbasin faucet

> for washbasins with a tap hole
> ceramic cartridge (ecological) and orientable aerator (ecological)
> in the box: faucet, flexible connections and fixing kit

Chrome finish	Weight	€
S500 0591 2850 703	1	•
Matte black finish		
S500 0591 2871 603	1	•



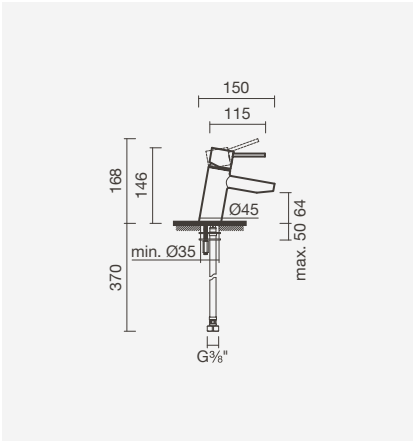

Medical single lever washbasin faucet

> for washbasins with a tap hole
> ceramic cartridge (ecological) and orientable aerator (ecological)
> in the box: faucet, flexible connections and fixing kit

Medical lever	Weight	€
S500 0591 3150 703	1	•



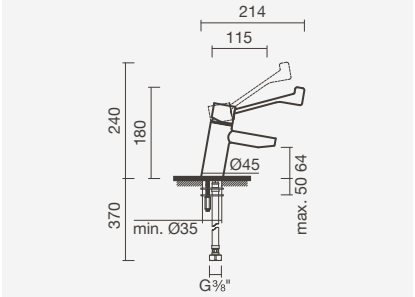

Single lever washbasin faucet (high spout)

> for washbasins without a tap hole
> ceramic cartridge (ecological) and orientable aerator (ecological)
> in the box: faucet, flexible connections and fixing kit

High spout (35cm) - Chrome finish	Weight	€
S500 5841 2850 711	3	•
High spout (35cm) - Matte black finish		
S500 5841 2871 611	3	•
High spout (30cm) - Chrome finish		
S500 0591 2850 711	3	•
High spout (30cm) - Matte black finish		
S500 0591 2871 611	3	•





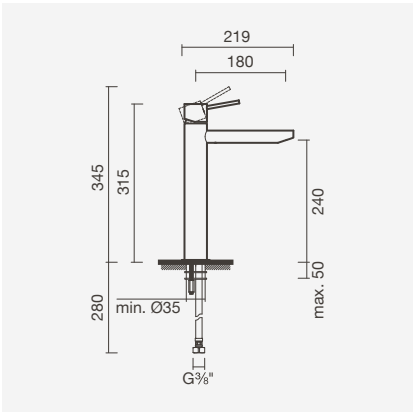

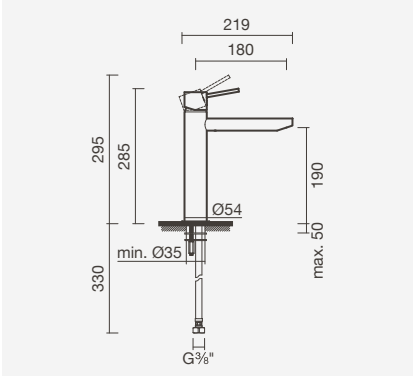

WASHBASIN





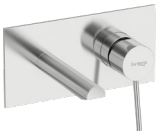



Single lever washbasin faucet

> for washbasins without a tap hole
> ceramic cartridge (ecological) and non-orientable aerator
> minimum installation depth: 50mm
> in the box: faucet and installation box

Long spout - Chrome finish	Weight	€
S500 0591 0812 601	3	•
Long spout - Matte black finish		
S500 0591 0871 601	3	•
Short spout - Chrome finish		
S500 0591 1012 601	2	•
Short spout - Matte black finish		
S500 0591 1071 601	2	•

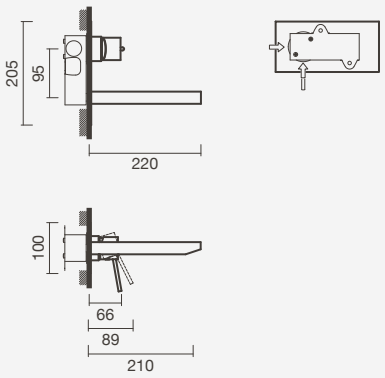

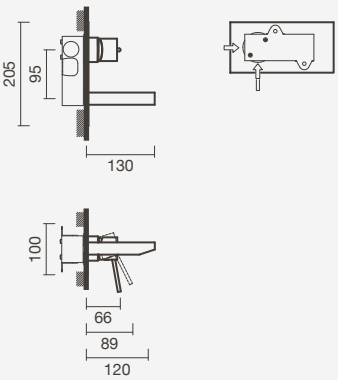



Self-closing washbasin faucet

> for washbasins with a tap hole
> self-closing cartridge and non-orientable aerator (ecological)
> opening time: 6 seconds (margin of error of 20%)
> adjustable flow restrictor reduces water consumption
> in the box: faucet and fixing kit

Mixed water inlet	Weight	€
S500 0590 2650 703	2	•
One water inlet		
S500 0590 1250 703	1	•

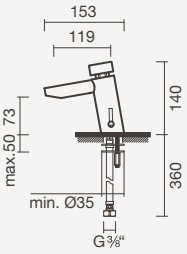



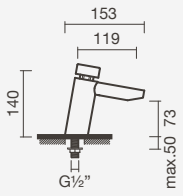

WASHBASIN

Self-closing washbasin faucet (high spout)



> for washbasins without a tap hole
> self-closing cartridge and non-orientable aerator (ecological)
> opening time: 6 seconds (margin of error 20%)
> adjustable flow restrictor reduces water consumption
> in the box: faucet and fixing kit

Mixed water inlet	Weight	€
S500 0590 2750 711	3	•
One water inlet		
S500 0590 1550 711	2	•

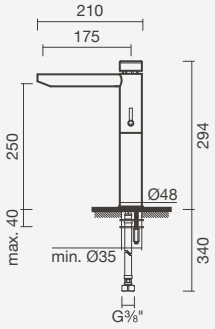



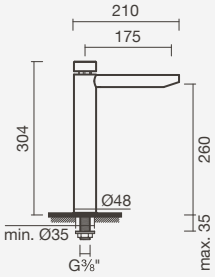

Electronic washbasin faucet



> for washbasins with a tap hole
> with solenoid valve and non-orientable aerator (ecological)
> activated by an infrared sensor
> powered by electric power (220V) or batteries (1.5V)
> in the box: faucet, electronic box, hidden mixing device, flexible connections and fixing kit

Mixed water inlet	Weight	€
S500 0592 9450 703	2	•

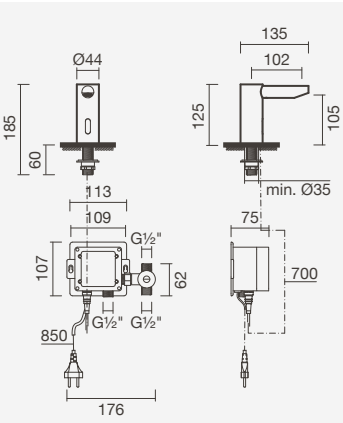

Electronic washbasin faucet



> for washbasins with a tap hole
> with solenoid valve and non-orientable aerator (ecological)
> activated by an infrared sensor
> powered by electric power (220V) or batteries (1.5V)
> in the box: faucet, electronic box, flexible connections and fixing kit

One water inlet	Weight	€
S500 0592 9350 703	2	•

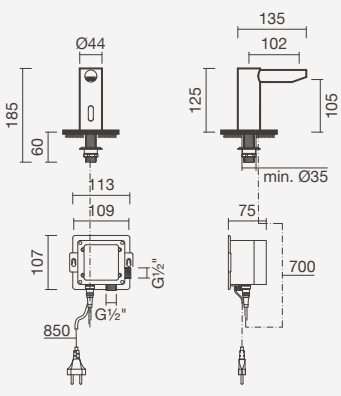

WASHBASIN

Electronic washbasin faucet (spout)

> for washbasins without a tap hole
> with solenoid valve and non-orientable aerator (ecological)
> activated by an infrared sensor
> powered by electric power (220V) or batteries (1.5V)
> in the box: faucet, electronic box, hidden mixing device, flexible connections and fixing kit

Mixed water inlet	Weight	€
S500 0592 9450 707	3	•



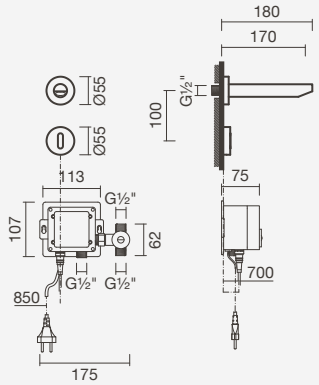

Electronic washbasin faucet (spout)

> for washbasins without a tap hole
> with solenoid valve and non-orientable aerator (ecological)
> activated by an infrared sensor
> powered by electric power (220V) or batteries (1.5V)
> in the box: faucet, electronic box, flexible connections and fixing kit

One water inlet	Weight	€
S500 0592 9350 707	2	•



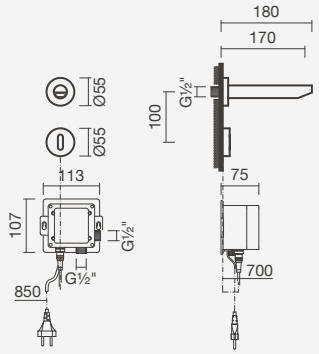

BIDET

Single lever bidet faucet

> for bidets with a tap hole
> ceramic cartridge (ecological) and orientable aerator
> in the box: faucet, flexible connections and fixing kit

Chrome finish	Weight	€
S500 0591 2850 701	1	•
Matte black finish		
S500 0591 2871 601	1	•





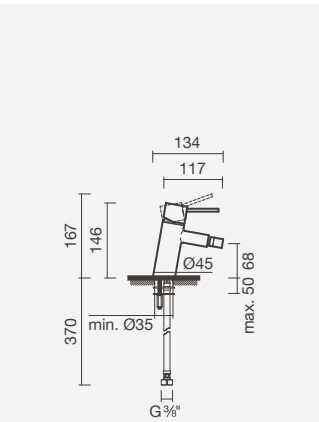

SHOWER





Single lever shower faucet

> for showers
> ceramic cartridge (ecological)
> in the box: faucet, hand shower, shower holder, 175cm shower hose and fixing kit

Chrome finish	Weight	€
S500 0591 3850 702	2	•
Matte black finish		
S500 0591 3871 602	2	•

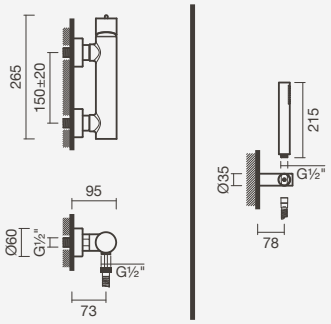

SHOWER



Thermostatic shower system

> for showers (2 functions: hand and overhead shower - angle adjustable)
> thermostatic cartridge (38° safe-stop)
> fixed shower system (non-adjustable height)
> in chromed brass
> in the box: shower system, overhead shower with Ø200mm, hand shower, hand-shower support (orientable and adjustable in height), 175cm shower hose and fixing kit

Reference	Weight	€
S500 0594 5950 709	4	•

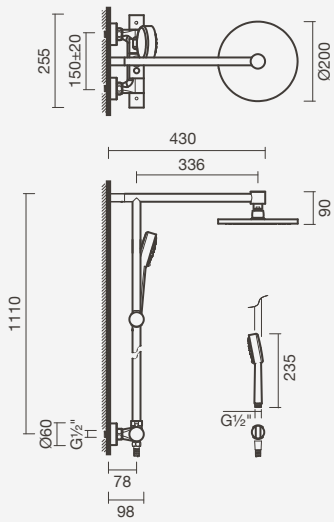

SHOWER / BATH

Thermostatic shower faucet (1 function)

> for showers or baths (1 function)
> thermostatic cartridge (38° safe-stop)
> adjustable installation depth: 45 to 85mm
> in the box: faucet





Square rosette	Weight	€
S500 0596 9850 706	2	•
Round rosette		
S500 0596 9050 706	2	•

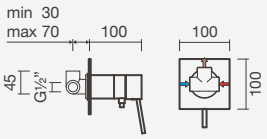

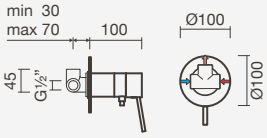

Thermostatic shower faucet (2 functions)

> for showers and/or baths (2 functions)
> thermostatic cartridge (38° safe-stop)
> adjustable installation depth: 60 to 75mm (horizontal rectangular rosette) and 55 to 85mm (vertical rectangular rosette and round rosette)
> in the box: faucet





Rectangular rosette (vertical)	Weight	€
S500 0596 9950 706	2	•
Round rosette		
S500 0596 9150 706	2	•

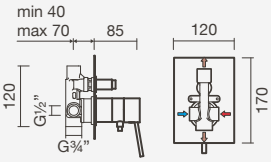

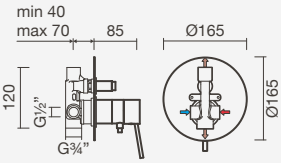

Thermostatic shower faucet (3 functions)

> for showers and/or baths (3 functions)
> thermostatic cartridge (38° safe-stop)
> adjustable installation depth: 45 to 75mm
> in the box: faucet





Rectangular rosette (vertical)	Weight	€
S500 0597 0050 706	2	•
Round rosettes		
S500 0596 9250 706	2	•

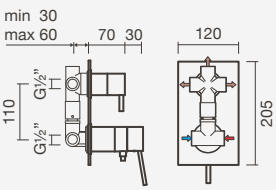

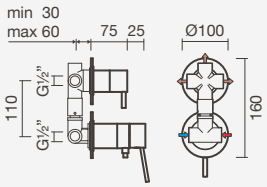

SHOWER / BATH



Thermostatic shower faucet (4 functions)

> for showers and/or baths (4 functions)
> thermostatic cartridge (38º safe-stop)
> adjustable installation depth: 60 to 75mm (horizontal rectangular rosette) and 45 to 75mm (vertical rectangular rosette and round rosettes)
> in the box: faucet

Rectangular rosette (vertical)		
S500 0597 0150 706	3	•
Round rosettes		
S500 0596 9350 706	3	•

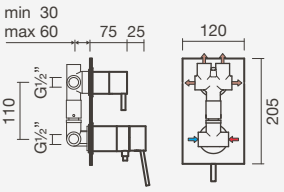



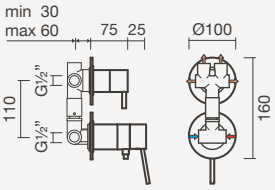

Single lever shower faucet (1 function)

> for showers or baths (1 function)
> ceramic cartridge
> adjustable installation depth: 45 to 75mm
> in the box: faucet

Square rosette	Weight	€
S500 0596 9450 706	1	•
Round rosette		
S500 0596 8650 706	1	•



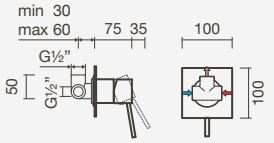



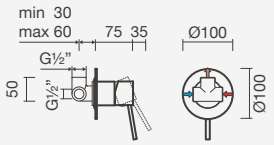

Single lever shower faucet (2 functions)

> for shower and/or bath (2 functions)
> ceramic cartridge
> adjustable installation depth: 60 to 75mm (horizontal rectangular rosette) and 55 to 75mm (vertical rectangular rosette and round rosette)
> in the box: faucet

Espelho redondo		
S500 0596 8750 706	2	•



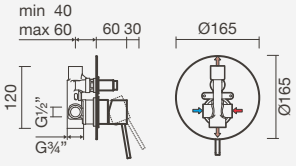

SHOWER / BATH





Single lever shower faucet (3 functions)

> for showers and/or baths (3 functions)
> ceramic cartridge
> adjustable installation depth: 45 to 75mm
> in the box: faucet

Rectangular rosette (vertical)	Weight	€
S500 0596 9650 706	2	•
Round rosettes		
S500 0596 8850 706	2	•

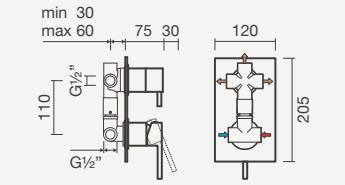

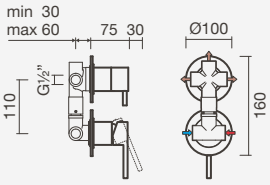





Single lever shower faucet (4 functions)

> for showers and/or baths (4 functions)
> ceramic cartridge
> adjustable installation depth: 60 to 75mm (horizontal rectangular rosette) and 45 to 75mm (vertical rectangular rosette and round rosettes)
> in the box: faucet

Rectangular rosette (vertical)	Weight	€
S500 0596 9750 706	3	•
Round rosettes		
S500 0596 8950 706	3	•

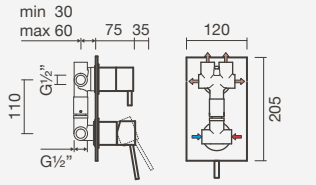

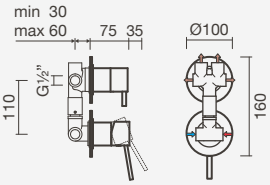

BATH





Single lever bath faucet

> for baths
> ceramic cartridge (ecological) and non-orientable aerator
> in the box: faucet, hand shower, shower holder, 175cm shower hose and fixing kit

Chrome finish	Weight	€
S500 0591 3850 705	3	•
Matte black finish		
S500 0591 3871 605	3	•

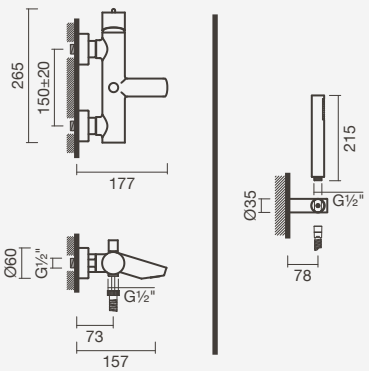



UNIC single lever bath faucet

Bloom



BLOOM single lever washbasin faucet

WASHBASIN

Single lever washbasin faucet





> for washbasins with a tap hole
> ceramic cartridge (ecological) and non-orientable aerator (ecological)
> cold start function
> in the box: faucet, flexible connections and fixing kit

Chrome finish	Weight	€
S502 0385 0212 600	1	•
Matte black finish		
N S502 0385 0271 600	1	•

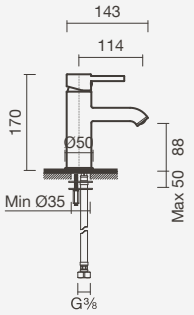

Single lever washbasin faucet (high spout)





> for washbasins without a tap hole
> ceramic cartridge (ecological) and non-orientable aerator (ecological)
> cold start function
> in the box: faucet, flexible connections and fixing kit

Chrome finish	Weight	€
S502 0381 2412 600	2	•
Matte black finish		
N S502 0381 2471 600	2	•

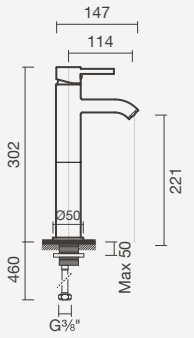

Self-closing washbasin faucet



> for washbasins without a tap hole
> self-closing cartridge
> opening time: 6 seconds (margin of error of 20%)
> minimum installation depth: 90mm
> in the box: faucet, installation box, flexible connections and fixing kit

One water inlet	Weight	€
S502 0760 1212 600	3	•

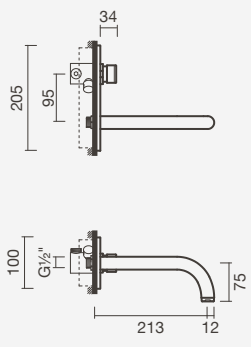

BIDET

Single lever bidet faucet

> for bidets with a tap hole
> ceramic cartridge (ecological) and orientable aerator (ecological)
> in the box: faucet, flexible connections and fixing kit

Reference	Weight	€
S502 0405 0212 600	1	•



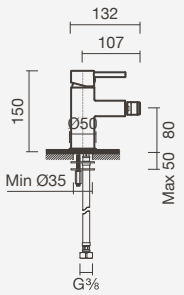

URINAL

Self-closing urinal faucet

> for urinals with horizontal water inlet
> self-closing cartridge
> flow time: 6 seconds (margin of error of 20%)
> adjustable installation depth: 45 to 80mm
> in the box: faucet

One water inlet	Weight	€
S502 0770 1212 600	1	•



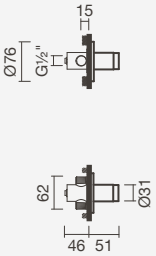

SHOWER

Single lever shower faucet

> for showers
> ceramic cartridge
> minimum installation depth: 90mm
> in the box: faucet, installation box, flexible connections and fixing kit

Rectangular rosette (horizontal)	Weight	€
S502 0700 0012 600	1	•



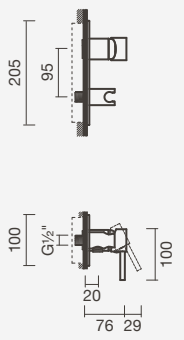

SHOWER





Self-closing shower faucet

> for showers
> self-closing cartridge
> opening time: 20 seconds (margin of error of 20%)
> adjustable installation depth: 48 to 75mm (mixed water inlet) and 45 to 80mm (one water inlet)
> in the box: faucet

Mixed water inlet	Weight	€
S502 0760 2512 600	3	•
One water inlet		
S502 0760 0612 600	1	•

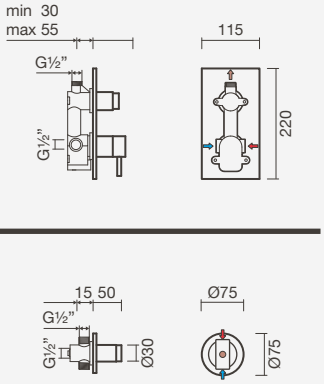





Single lever shower faucet

> for showers
> ceramic cartridge (ecological)
> in the box: faucet, hand shower, shower holder, 150cm shower hose and fixing kit

Chrome finish	Weight	€
S502 0416 6212 600	2	•
Matte black finish		
S502 0416 6271 600	2	•

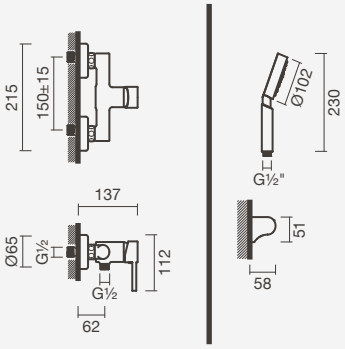

SHOWER / BATH



Thermostatic shower faucet (3 functions)

> for showers and/or baths (3 functions)
> thermostatic cartridge (38° safe-stop)
> adjustable installation depth: 45 to 75mm
> in the box: faucet

Round rosettes	Weight	€
S502 0696 9212 602	3	•

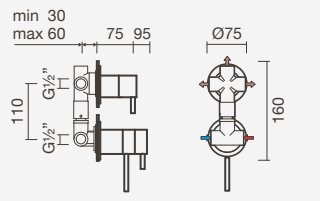

SHOWER





Thermostatic shower system

> for showers (2 functions: hand and overhead shower - angle adjustable)
> thermostatic cartridge (38° safe-stop)
> telescopic shower system (adjustable height)
> in the box: shower system, overhead shower with Ø230mm, hand shower, hand-shower support (orientable and adjustable in height), 175cm shower hose and fixing kit

Chrome finish	Weight	€
S502 0734 6312 600	4	•
Matte black finish		
S502 0734 6371 600	4	•

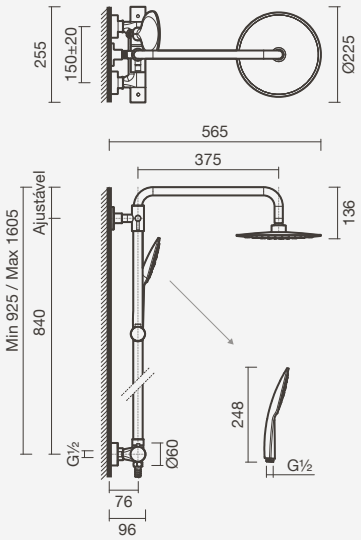





Shower system

> for showers (2 functions: hand and overhead shower - angle adjustable)
> ceramic cartridge (ecological)
> telescopic shower system (adjustable height)
> in the box: shower system, overhead shower with Ø230mm, hand shower, hand-shower support (orientable and adjustable in height), 175cm shower hose and fixing kit

Chrome finish	Weight	€
S502 0744 6312 600	5	•
Matte black finish		
S502 0744 6371 600	5	•

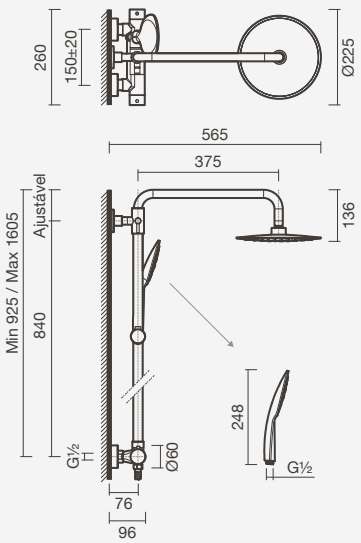



BLOOM thermostatic shower system in matte black finish

SHOWER / BATH





Single lever shower faucet (1 function)

> for shower or bath (1 function)
> ceramic cartridge
> adjustable installation depth: 45 to 75mm
> in the box: faucet

Round rosette - chrome finish	Weight	€
S502 0426 8612 600	1	•
Round rosette - matte black finish		
S502 0426 8671 600	1	•

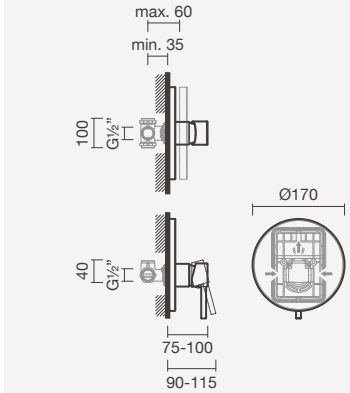





Single lever shower faucet (2 functions)

> for shower and/or bath (2 functions)
> ceramic cartridge
> adjustable installation depth: 60 to 75mm
> in the box: faucet

Round rosette - chrome finish	Weight	€
S502 0426 8712 600	1	•
Round rosette - matte black finish		
S502 0426 8771 600	1	•

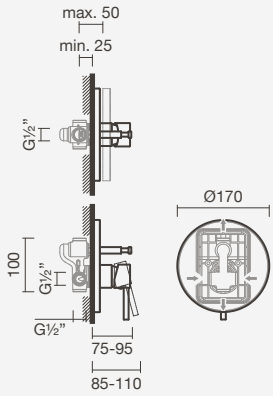



BLOOM single lever bath faucet in matte black finish

BATH



Single lever bath faucet

> for baths
> ceramic cartridge and non-orientable aerator
> in the box: faucet, hand shower, shower holder, 175cm shower hose and fixing kit

Chrome finish	Weight	€
S502 0417 8012 600	2	•
Matte black finish		
S502 0417 8071 600	2	•

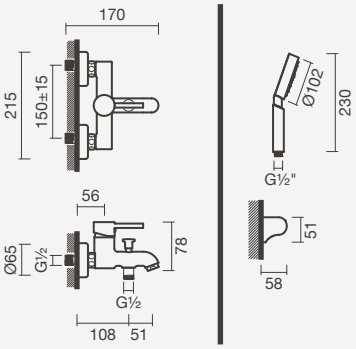

Single lever bath faucet

> for baths
> ceramic cartridge and non-orientable aerator
> minimum installation depth: 90mm
> in the box: faucet, installation box, flexible connections and fixing kit

Rectangular rosette (horizontal)	Weight	€
S502 0680 0012 600	3	•



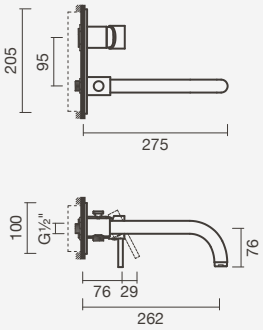

Bath spout

> for baths
> in the box: spout

Reference	Weight	€
S502 0670 0012 600	1	•



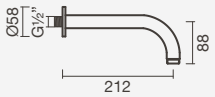

Viva



VIVA single lever washbasin faucet

WASHBASIN

Single lever washbasin faucet

> for washbasins with a tap hole
> ceramic cartridge (ecological) and non-orientable aerator (ecological)
> cold start function
> in the box: faucet, flexible connections and fixing kit

Reference	Weight	€
S502 0245 0212 600	1	•



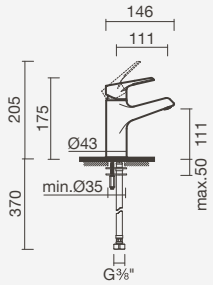

NEW

Single lever washbasin faucet (medical)

> for washbasins with a tap hole
> ceramic cartridge and non-orientable aerator
> cold start function
> in the box: faucet, flexible connections and fixing kit

Reference	Weight	€
S502 0245 0212 601	1	•



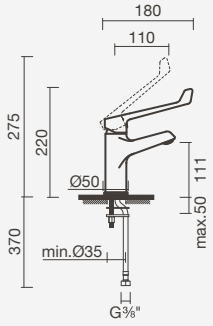

NEW

Wall-mounted washbasin faucet (medical)

> with slop hopper, utility sink, laundry sink
  or washbasins without a tap hole
> ceramic cartridge and non-orientable aerator
> in the box: faucet, flexible connections and fixing kit

Reference	Weight	€
S502 1033 5812 600	2	•

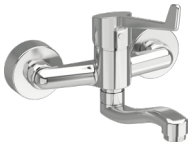

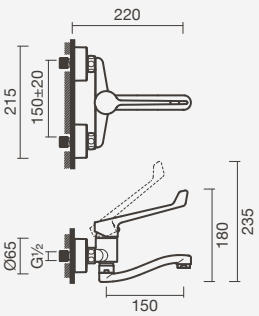

BIDET

Single lever bidet faucet

> for bidets with a tap hole
> ceramic cartridge (ecological) and orientable aerator (ecological)
> in the box: faucet, flexible connections and fixing kit

Reference	Weight	€
S502 0275 0212 600	1	•



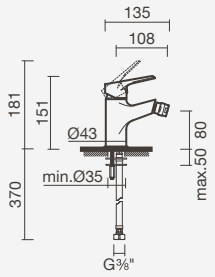

SHOWER

Single lever shower faucet

> for showers
> ceramic cartridge (ecological)
> in the box: faucet, hand shower, hand shower support, 170cm shower hose and fixing kit

Reference	Weight	€
S502 0301 3912 600	2	•



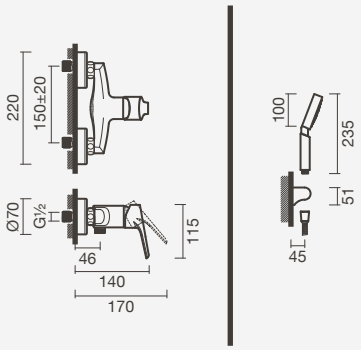

NEW

Single lever shower faucet (medical)

> for showers
> ceramic cartridge (ecological)
> in the box: faucet, hand shower, hand shower support, 150cm shower hose and fixing kit

Reference	Weight	€
S502 0301 3912 601	2	•



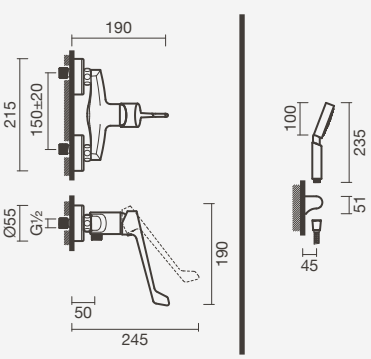

BATH

Single lever bath faucet

> for baths
> ceramic cartridge and non-orientable aerator (ecological)
> in the box: faucet, hand shower, hand shower support, 170cm shower hose and fixing kit



Reference	Weight	€
S502 0291 3912 600	2	•

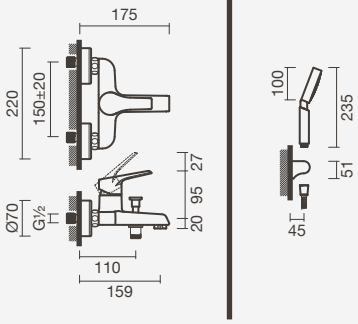



VIVA single lever shower faucet (medical)

Scope



Single lever washbasin faucet SCOPE

WASHBASIN

Single lever washbasin faucet

> for washbasins with a tap hole
> ceramic cartridge (ecological) and non-orientable aerator (ecological)
> cold start function
> in the box: faucet, flexible connections and fixing kit

Reference	Weight	€
S502 1210 0012 600	2	•



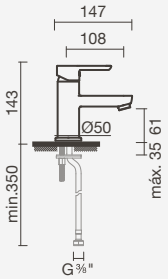

BIDET

Single lever bidet faucet

> for bidets with a tap hole
> ceramic cartridge (ecological) and orientable aerator (ecological)
> in the box: faucet, flexible connections and fixing kit

Reference	Weight	€
S502 1220 0012 600	1	•



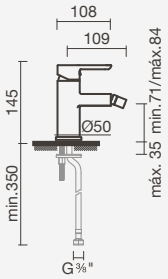

SHOWER

Single lever shower faucet

> for showers
> ceramic cartridge (ecological)
> in the box: faucet, hand shower, hand shower support, 175cm shower hose and fixing kit

Reference	Weight	€
S502 1230 0012 600	2	•



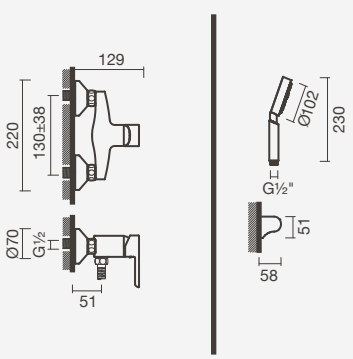

SHOWER / BATH



Single lever shower faucet (1 function)

> for shower or bath (1 function)
> ceramic cartridge
> adjustable installation depth: 45 to 75mm
> in the box: faucet

Reference	Weight	€
S502 1256 8612 600	1	•

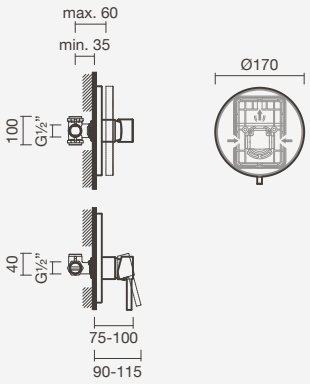



Single lever shower faucet (2 functions)

> for shower or bath (2 functions)
> ceramic cartridge
> adjustable installation depth: 60 to 75mm
> in the box: faucet

Reference	Weight	€
S502 1256 8712 600	1	•

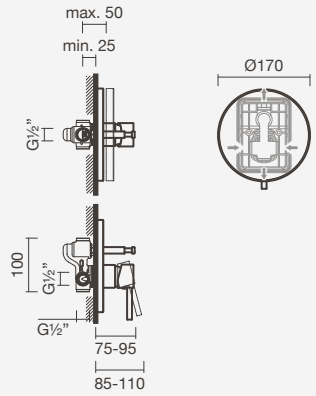

BATH



Single lever bath faucet

> for baths
> ceramic cartridge and non-orientable aerator (ecological)
> in the box: faucet, hand shower, hand shower support, 175cm shower hose and fixing kit

Reference	Weight	€
S502 1240 0012 600	2	•

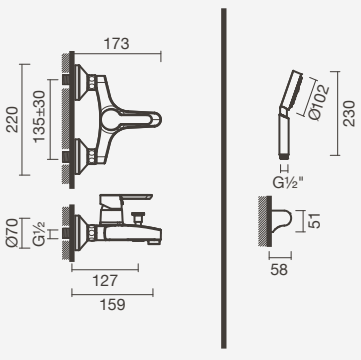



SCOPE single lever shower faucet with 2 functions, slim overhead shower 300 and round standard hand shower

Atlas 40



ATLAS 40 single lever washbasin faucet

WASHBASIN



Single lever washbasin faucet

> for washbasins with a tap hole
> ceramic cartridge (ecological) and non-orientable aerator
> in the box: faucet, flexible connections and fixing kit

With push-open waste set	Weight	€
S500 0397 7450 703	1	•
Without push-open waste set		
S500 0391 2750 703	1	•

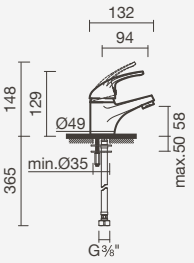

BIDET



Single lever bidet faucet

> for bidets with a tap hole
> ceramic cartridge (ecological) and orientable aerator
> in the box: faucet, flexible connections and fixing kit

With push-open waste set	Weight	€
S500 0397 7450 701	1	•
Without push-open waste set		
S500 0391 2750 701	1	•

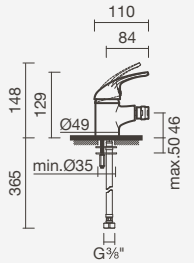

SHOWER



Single lever shower faucet

> for showers
> ceramic cartridge (ecological)
> flow restrictor integrated into the shower hose
> in the box: faucet, hand shower, hand shower support, 175cm shower hose and fixing kit

Reference	Weight	€
S500 0391 3850 702	1	•

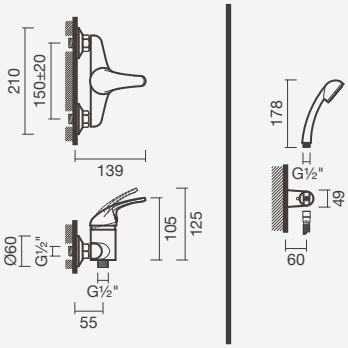

BATH



Single lever bath faucet

> for baths
> ceramic cartridge (ecological) and non-orientable aerator
> in the box: faucet, hand shower, hand shower support, 175cm shower hose and fixing kit

Reference	Weight	€
S500 0391 3850 705	1	•

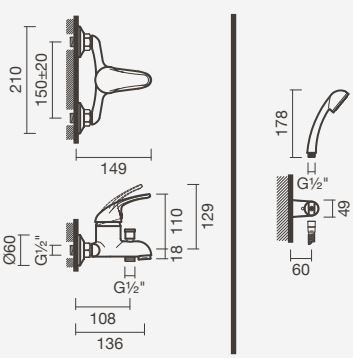

Xs



XS single lever washbasin faucet

WASHBASIN



Single lever washbasin faucet

> for washbasins with a tap hole
> ceramic cartridge and non-orientable aerator (ecological)
> in the box: faucet, flexible connections and fixing kit

Reference	Weight	€
S502 0195 0212 600	1	•

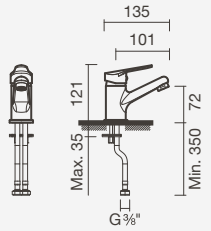

BIDET



Single lever bidet faucet

> for bidets with a tap hole
> ceramic cartridge and orientable aerator (ecological)
> in the box: faucet, flexible connections and fixing kit

Reference	Weight	€
S502 0205 0212 600	1	•

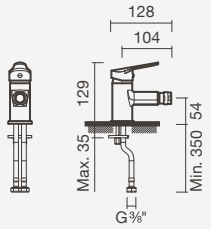

SHOWER



Single lever shower faucet

> for showers
> ceramic cartridge
> in the box: faucet, hand shower, shower holder, 175cm shower hose and fixing kit

Reference	Weight	€
S502 0211 3712 600	1	•

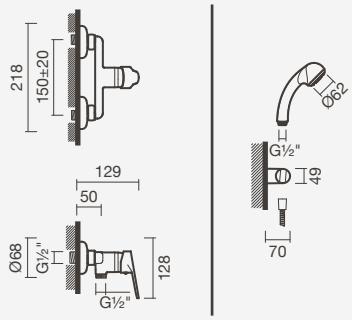

BATH



Single lever bath faucet

> for baths
> ceramic cartridge and non-orientable aerator (ecological)
> in the box: faucet, hand shower, shower holder, 175cm shower hose and fixing kit

Reference	Weight	€
S502 0221 3712 600	2	•

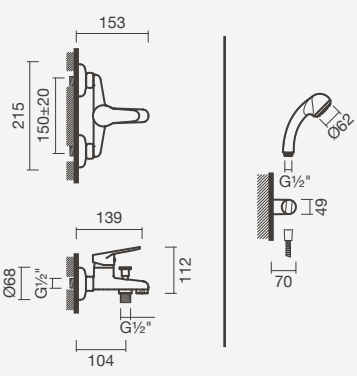

Grecia



GRECIA two-handle washbasin faucet

WASHBASIN



Two-handle washbasin faucet

> for washbasins with a tap hole
> ¼ turn ceramic disc valves and non-orientable aerator
> in the box: faucet, push-open waste set, flexible connections and fixing kit

Reference	Weight	€
S500 0481 2350 703	2	•

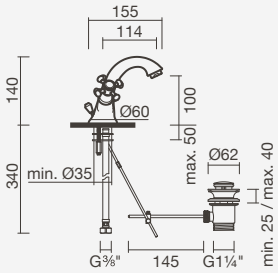

BIDET



Two-handle bidet faucet

> for bidets with a tap hole
> ¼ turn ceramic disc valves and orientable aerator
> in the box: faucet, push-open waste set, flexible connections and fixing kit

Reference	Weight	€
S500 0480 0050 701	1	•

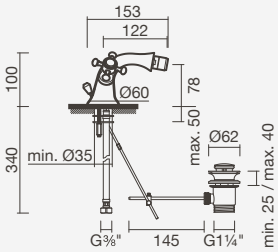

SHOWER



Two-handle shower faucet

> for showers
> ¼ turn ceramic disc valves
> in the box: faucet, hand shower, shower holder, 175cm shower hose and fixing kit

Reference	Weight	€
S500 0481 3750 702	1	•

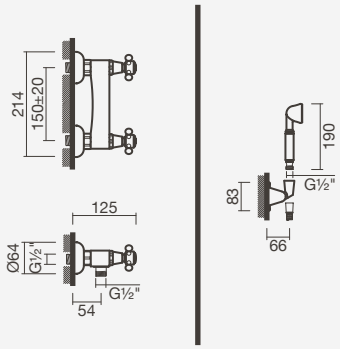

BATH



Two-handle bath faucet

> for baths
> ¼ turn ceramic disc valves and non-orientable aerator
> in the box: faucet, hand shower, shower holder, 175cm shower hose and fixing kit

Reference	Weight	€
S500 0481 3750 705	2	•

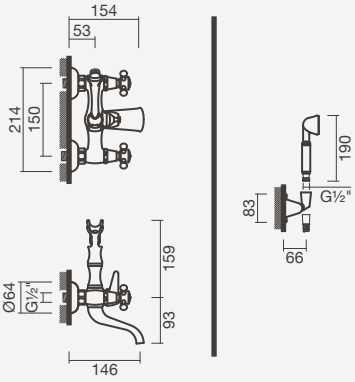

Electronic faucets



SUN electronic washbasin faucet with a matte black finish and EVEN 160 *solid surface* wall-mounted washbasins

WASHBASIN - SUN







Electronic washbasin faucet

> for washbasins with a tap hole
> with solenoid valve and non-orientable aerator (ecological)
> activated by an infrared sensor
> powered by electric power (230V) or batteries (6V)
> in the box: faucet, electronic box, flexible connections and fixing kit

One water inlet - chrome finish	Weight	€
S502 0960 0012 600	2	•
One water inlet - matte black finish		
S502 0960 0071 600	2	•
One water inlet - gold finish		
S502 0960 0071 700	2	•

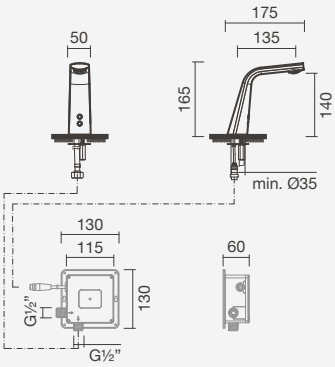



SUN electronic washbasin faucet with a gold finish

WASHBASIN - UNIC



Electronic washbasin faucet

> for washbasins with a tap hole
> with solenoid valve and non-orientable aerator (ecological)
> activated by an infrared sensor
> powered by electric power (220V) or batteries (1.5V)
> in the box: faucet, electronic box, hidden mixing device, flexible connections and fixing kit

Mixed water inlet	Weight	€
S500 0592 9450 703	2	•

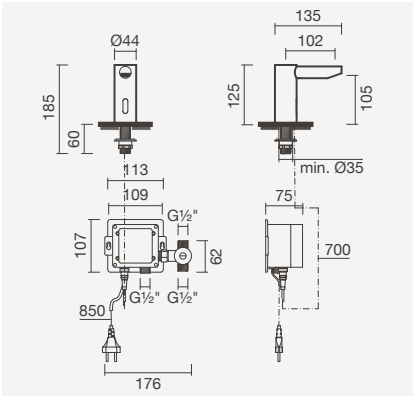



Electronic washbasin faucet

> for washbasins with a tap hole
> with solenoid valve and non-orientable aerator (ecological)
> activated by an infrared sensor
> powered by electric power (220V) or batteries (1.5V)
> in the box: faucet, electronic box, flexible connections and fixing kit

One water inlet	Weight	€
S500 0592 9350 703	2	•

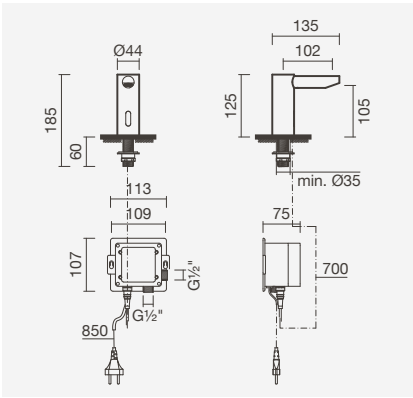



Electronic washbasin faucet

> for washbasins without a tap hole
> with solenoid valve and non-orientable aerator (ecological)
> activated by an infrared sensor
> powered by electric power (220V) or batteries (1.5V)
> in the box: faucet, electronic box, hidden mixing device, flexible connections and fixing kit

Mixed water inlet	Weight	€
S500 0592 9450 707	2	•

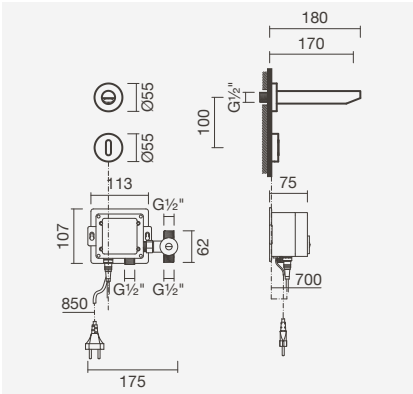



Electronic washbasin faucet

> for washbasins without a tap hole
> with solenoid valve and non-orientable aerator (ecological)
> activated by an infrared sensor
> powered by electric power (220V) or batteries (1.5V)
> in the box: faucet, electronic box, flexible connections and fixing kit

One water inlet	Weight	€
S500 0592 9350 707	2	•

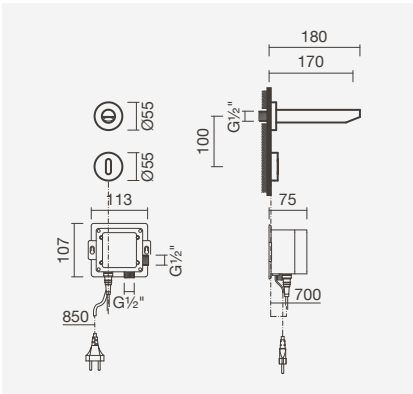

WASHBASIN - BALANCE

Electronic washbasin faucet

> for washbasins with a tap hole
> with solenoid valve and non-orientable aerator (ecological)
> activated by an infrared sensor
> powered by electric power (220V) or batteries (1.5V)
> in the box: faucet, electronic box, hidden mixing device, flexible connections and fixing kit

Mixed water inlet	Weight	€
S500 0402 9350 703	1	•



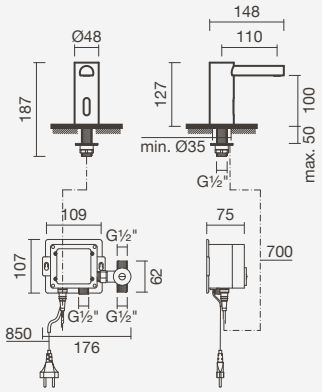

Electronic washbasin faucet

> for washbasins without a tap hole
> with solenoid valve and non-orientable aerator (ecological)
> activated by an infrared sensor
> powered by electric power (220V) or batteries (1.5V)
> in the box: faucet, electronic box, hidden mixing device, flexible connections and fixing kit

Mixed water inlet	Weight	€
S500 8952 9450 700	2	•



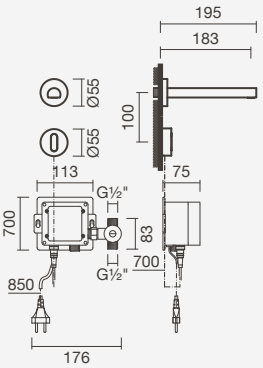

Electronic washbasin faucet

> for washbasins without a tap hole
> with solenoid valve and non-orientable aerator (ecological)
> activated by an infrared sensor
> powered by electric power (220V) or batteries (1.5V)
> in the box: faucet, electronic box, flexible connections and fixing kit

One water inlet	Weight	€
S500 8942 9350 700	2	•



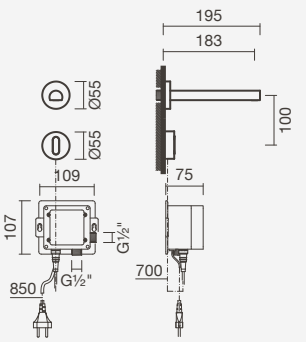

Self-closing



BLOOM self-closing shower faucet

WASHBASIN - UNIC

Self-closing washbasin faucet

> for washbasins with a tap hole
> self-closing cartridge and non-orientable aerator (ecological)
> opening time: 6 seconds (margin of error of 20%)
> adjustable flow restrictor reduces water consumption
> in the box: faucet, flexible connections and fixing kit



Mixed water inlet	Weight	€
S500 0590 2650 703	2	•
One water inlet		
S500 0590 1250 703	1	•

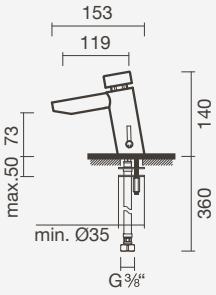



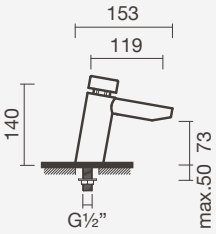

Self-closing washbasin faucet (high spout)

> for washbasins without a tap hole
> self-closing cartridge and non-orientable aerator (ecological)
> opening time: 6 seconds (margin of error of 20%)
> adjustable flow restrictor reduces water consumption
> in the box: faucet, flexible connections and fixing kit



Mixed water inlet	Weight	€
S500 0590 2750 711	3	•
One water inlet		
S500 0590 1550 711	2	•

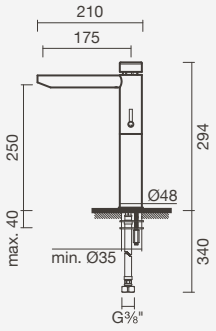



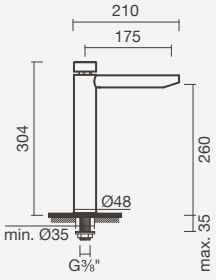

WASHBASIN - ECO-STOP



Self-closing washbasin faucet

> for washbasins with a tap hole
> self-closing cartridge and non-orientable aerator (ecological)
> opening time: 6 seconds (margin of error of 20%)
> adjustable flow restrictor reduces water consumption
> in the box: faucet

One water inlet	Weight	€
S500 0460 1250 703	1	•

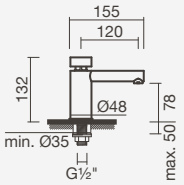

WASHBASIN - BLOOM



Self-closing washbasin faucet

> for washbasins without a tap hole
> self-closing cartridge
> opening time: 6 seconds (margin of error of 20%)
> minimum installation depth: 90mm
> in the box: faucet, installation box, flexible connections and fixing kit

One water inlet	Weight	€
S502 0760 1212 600	3	•

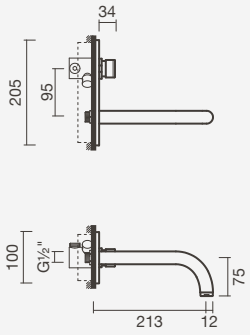

WASHBASIN - JANO



Self-closing washbasin faucet

> for washbasins with a tap hole
> self-closing cartridge and non-orientable aerator
> opening time: 6 seconds (margin of error of 20%)
> adjustable flow restrictor reduces water consumption
> in the box: faucet

One water inlet	Weight	€
S500 0490 1250 703	1	•

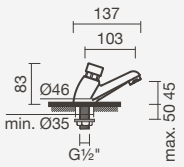





Self-closing washbasin faucets

> for washbasins without a tap hole
> self-closing cartridge and non-orientable aerator (ecological)
> opening time: 6 seconds (margin of error of 20%)
> adjustable flow restrictor reduces water consumption
> in the box: faucet

One water inlet - Long spout	Weight	€
S500 0490 1450 703	1	•
One water inlet - Short spout		
S500 0490 1350 703	1	•

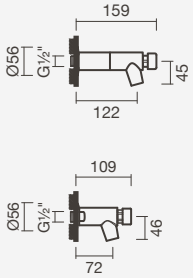

SHOWER - JANO



Self-closing shower faucet

> for showers
> self-closing cartridge
> opening time: 20 seconds (margin of error of 20%)
> adjustable flow restrictor reduces water consumption
> in the box: faucet

Mixed water inlet	Weight	€
S500 0490 2450 702	3	•
One water inlet		
S500 0490 0650 702	1	•

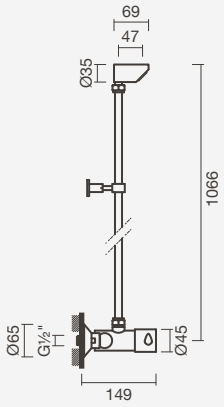



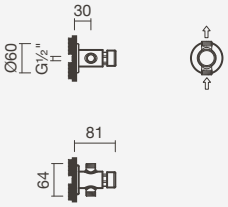

SHOWER - BLOOM



Self-closing shower faucet

> for showers
> self-closing cartridge
> opening time: 20 seconds (margin of error of 20%)
> adjustable installation depth: 45 to 80mm (mixed water inlet) and 48 to 75mm (one water inlet)
> in the box: faucet

Mixed water inlet	Weight	€
S502 0760 2512 600	3	•
One water inlet		
S502 0760 0612 600	1	•

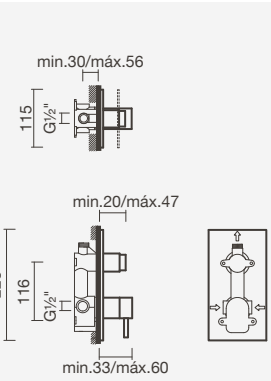



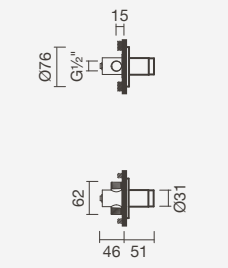

URINAL - BLOOM



Self-closing urinal faucet

> for urinals
> self-closing cartridge
> opening time: 6 seconds (margin of error of 20%)
> adjustable installation depth: 45 to 80mm
> in the box: faucet

One water inlet	Weight	€
S502 0770 1212 600	1	•

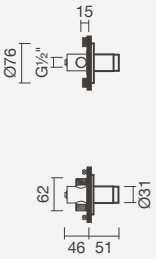

URINAL - JANO



Self-closing urinal faucet

> for urinals
> self-closing cartridge
> opening time: 6 seconds (margin of error of 20%)
> adjustable flow restrictor reduces water consumption
> in the box: faucet

One water inlet	Weight	€
S500 0491 3450 710	1	•

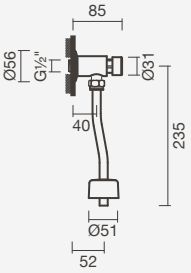



ECO-STOP self-closing washbasin faucet

Shut-off valves



Shut-off valve

> without filter
> square handle
> in chrome plated brass
> in the box: shut-off valve (1 unit)

Reference	Weight	€
TNR5 0000 0000 0169	1	•

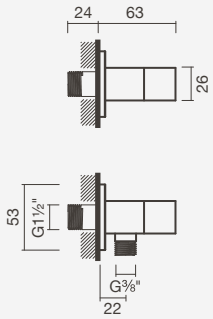



Shut-off valve

> without filter
> square handle
> in chrome plated brass
> in the box: shut-off valve (1 unit)

Reference	Weight	€
TNR5 0000 0000 0168	1	•

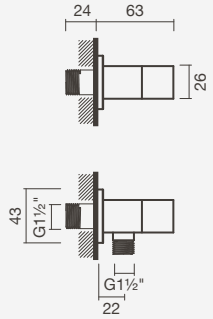



Shut-off valve

> with filter
> for the connection of monoblocs
> in chrome plated brass
> in the box: shut-off valves (2 units)

3/8 turn	Weight	€
TNR5 0000 0000 0167	1	•
1/2 turn		
SR50 0000 0002 134	1	•

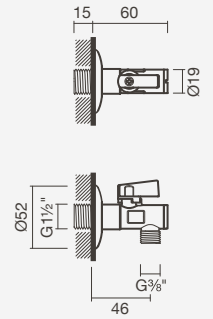





Shut-off valve

> without filter
> round handle
> in brass
> in the box: shut-off valve (1 unit)

Chrome finish	Weight	€
TNR5 0000 0000 0170	1	•
Matte black finish		
S502 0524 8871 600	1	•

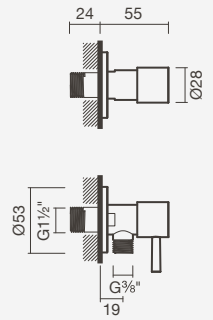

Specific uses

WASHBASIN - JANO

Single lever washbasin faucet

> for washbasins with a tap hole
> ¼ turn ceramic disc valves and non-orientable aerator
> in the box: faucet

One water inlet	Weight	€
S500 0490 1050 703	1	•



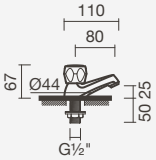

MULTI-USES - JANO

Single lever multi-uses faucet

> for washbasins / kitchen sinks / others with tap hole
> ¼ turn ceramic disc valves and non-orientable aerator
> pivoting upper body
> in the box: faucet

Reference	Weight	€
S500 0490 0750 711	1	•



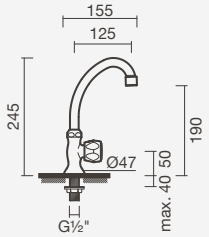

BATH - BLOOM

Bath spout

> for baths
> in the box: spout

Reference	Weight	€
S502 0670 0012 600	1	•



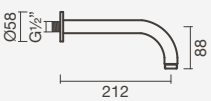

Outlet wastes

PUSH-OPEN



1 1/4" Outlet waste set

> for washbasins or bidets with overflow
> with push-open valve (stop & go)
> square or round outlet waste cover (removable)
> in chrome plated brass
> in the box: outlet waste set

Square outlet waste cover	Weight	€
TN50 0087 1619 9900	1	•
Round outlet waste cover		
TN50 0090 1639 9900	1	•



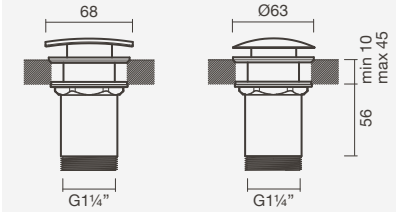

1 1/4" Outlet waste set

> for washbasins or bidets with overflow
> with push-open valve (stop & go)
> round outlet waste cover (removable)
> in brass
> in the box: outlet waste set

Square outlet waste cover - chrome finish	Weight	€
TN50 0089 1629 9900	1	•
Round outlet waste cover - matte black finish		
S502 0540 0071 600	1	•





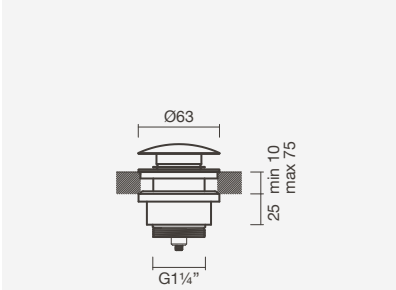

1 1/4" Outlet waste set

> for washbasins or bidets with overflow
> with push-open valve (stop & go)
> round outlet waste cover (removable)
> in chrome plated brass
> in the box: outlet waste set

Reference	Weight	€
TN50 0091 1639 9900	1	•



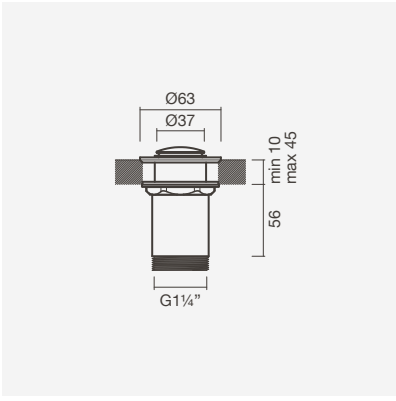

FREEFLOW

1 1/4" Outlet waste set

> for washbasins or bidets without overflow
> with non-closing valve (freeflow)
> round outlet waste cover (removable)
> in chrome plated brass
> in the box: outlet waste set

Reference	Weight	€
TN50 0088 3179 9900	1	•



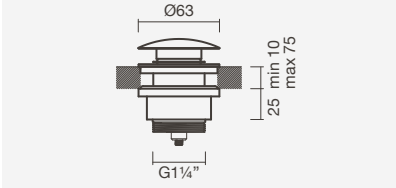

Bottle traps



1 1/4” Bottle trap

> for washbasins or bidets
> square or round format
> in chrome plated brass
> in the box: bottle trap

Square format - chrome finish	Weight	€
TN50 0082 3199 9900	1	•
Round format - chrome finish		
TN50 0084 2139 9900	1	•
Round format - matte black finish		
S502 0511 4471 600	1	•

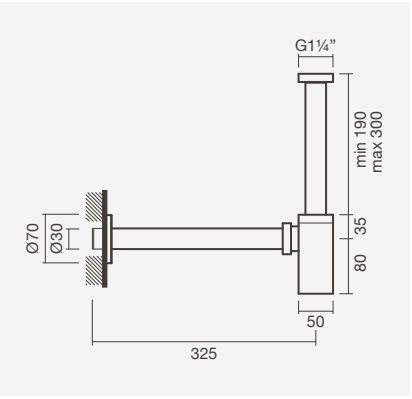





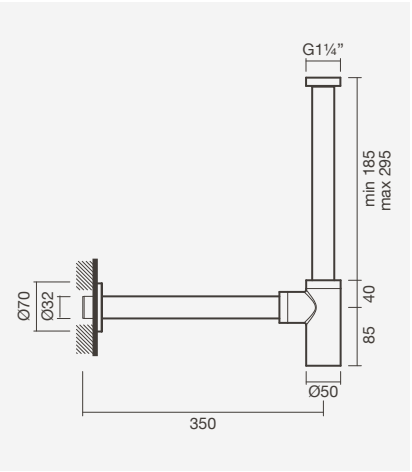

1 1/4” Bottle trap

> for washbasins or bidets
> round format
> in chrome plated brass
> in the box: bottle trap

Reference	Weight	€
TN50 0086 2149 9900	1	•



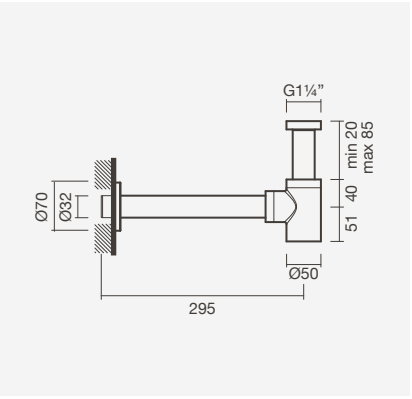

1 1/4” Bottle trap

> for washbasins or bidets
> round format
> in chrome plated brass
> in the box: bottle trap

Reference	Weight	€
TN50 0085 3219 9900	1	•



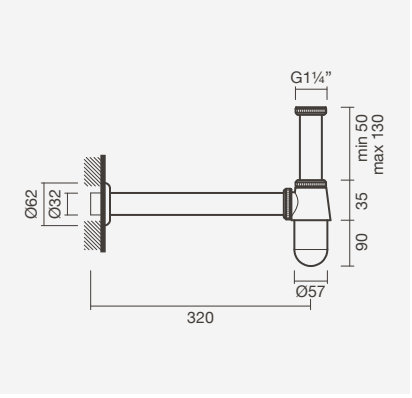

NEW



1 1/4" Bottle trap and outlet waste

> for washbasins or bidets
> with push-open valve (stop & go)
> in plastic
> in the box: bottle trap and outlet waste

Reference	Weight	€
S502 1410 0012 600	1	•

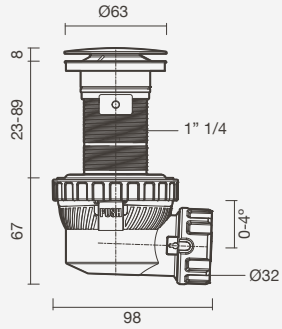



1 1/4" Bottle trap with ALBUS 40 washbasin and BALANCE faucet

Kitchen faucets



VOLT - *Square* body - single lever kitchen faucet

VOLT - *"CURVE"* BODY

Single lever kitchen faucet

> for kitchen sinks with a tap hole
> ceramic cartridge (ecological) and non-orientable aerator
> pivoting upper body and extractable shower
> in the box: faucet, flexible connections and fixing kit



Reference	Weight	€
S502 0640 0012 600	3	•

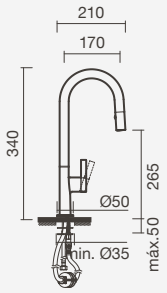

VOLT - *"SQUARE"* BODY

Single lever kitchen faucet

> for kitchen sinks with a tap hole
> ceramic cartridge (ecological) and non-orientable aerator
> pivoting upper body and extractable shower
> in the box: faucet, flexible connections and fixing kit



Reference	Weight	€
S502 0650 0012 600	3	•

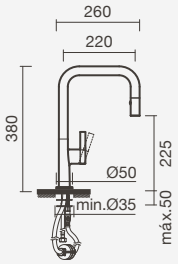

VOLT - *"LINE"* BODY

Single lever kitchen faucet

> for kitchen sinks with a tap hole
> ceramic cartridge (ecological) and non-orientable aerator
> pivoting upper body and extractable shower
> in the box: faucet, flexible connections and fixing kit



Reference	Weight	€
S502 0660 0012 600	3	•

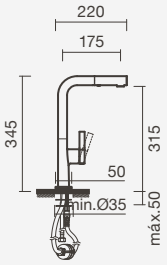

STEM - "T" BODY



Single lever kitchen faucet

> for kitchen sinks with a tap hole
> ceramic cartridge (ecological) and non-orientable aerator
> cold start function
> pivoting upper body and extractable shower with 2 shower functions (shower: 3l/min - 3bar and mousse: 6l/min - 3 bar)
> in the box: faucet, flexible connections and fixing kit

Reference	Weight	€
S502 0807 8212 601	2	•

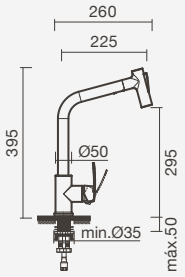

STEM - "L" BODY



Single lever kitchen faucet

> for kitchen sinks with a tap hole
> ceramic cartridge (ecological) and non-orientable aerator
> cold start function
> pivoting upper body and extractable shower with 2 shower functions (shower: 3l/min - 3bar and mousse: 6l/min - 3 bar)
> in the box: faucet, flexible connections and fixing kit

Reference	Weight	€
S502 0807 8212 600	2	•

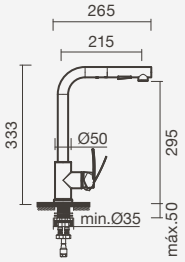

STEM - "C" BODY

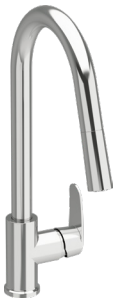

Single lever kitchen faucet

> for kitchen sinks with a tap hole
> ceramic cartridge (ecological) and non-orientable aerator
> cold start function
> pivoting upper body and extractable shower with 2 shower functions (shower: 3l/min - 3bar and mousse: 6l/min - 3 bar)
> in the box: faucet, flexible connections and fixing kit

Reference	Weight	€
S502 0807 8212 602	2	•

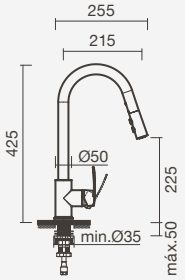



STEM - *T* body - single lever kitchen faucet

LOOP

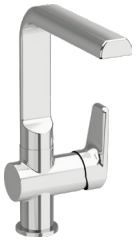

Single lever kitchen faucet

> for kitchen sinks with a tap hole
> ceramic cartridge (ecological) and non-orientable aerator
> cold start function
> pivoting upper body
> in the box: faucet, flexible connections and fixing kit

Reference	Weight	€
S502 0880 0012 600	3	•

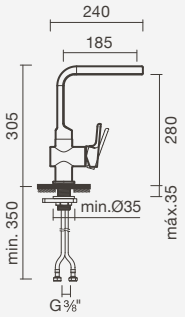

PRIM



Single lever kitchen faucet

> for kitchen sinks with a tap hole
> ceramic cartridge and non-orientable aerator
> pivoting upper body
> in the box: faucet, flexible connections and fixing kit

Reference	Weight	€
S502 0890 0012 600	2	•

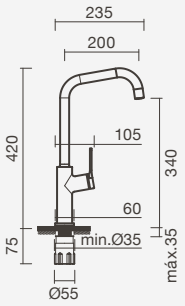



LOOP single lever kitchen faucet

SILK



Single lever kitchen faucet

> for kitchen sinks with a tap hole
> ceramic cartridge (ecological) and non-orientable aerator
> pivoting upper body
> in the box: faucet, flexible connections and fixing kit

Reference	Weight	€
S500 0540 0050 700	2	•

ECO

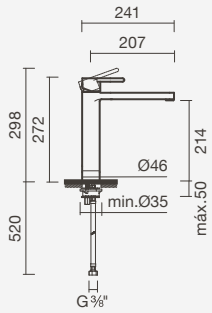

UNIC



Single lever kitchen faucet

> for kitchen sinks with a tap hole
> ceramic cartridge (ecological) and orientable aerator
> pivoting upper body
> in the box: faucet, flexible connections and fixing kit

Reference	Weight	€
S500 0590 0050 704	1	•

ECO

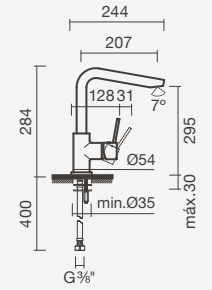

BLOOM





Single lever kitchen faucet

> for kitchen sinks with a tap hole
> ceramic cartridge (ecological) and non-orientable aerator
> pivoting upper body
> cold start function
> in the box: faucet, flexible connections and fixing kit

Chrome finish	Peso	€
S502 0410 0012 600	2	•
Matte black finish		
S502 0410 0071 600	2	•

ECO COLD START

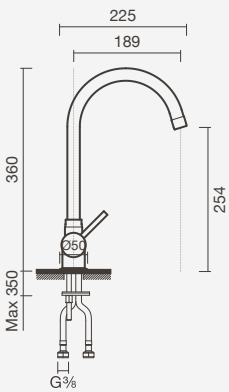

ATLAS 40

Single lever kitchen faucet (high spout)

> for kitchen sinks with a tap hole
> ceramic cartridge (ecological) and non-orientable aerator
> pivoting upper body
> in the box: faucet, flexible connections and fixing kit



Reference	Weight	€
S500 0391 2450 704	1	•

ECO



Single lever kitchen faucet (low spout)

> for kitchen sinks with a tap hole
> ceramic cartridge (ecological) and non-orientable aerato
> pivoting upper body
> in the box: faucet, flexible connections and fixing kit



Reference	Weight	€
S500 0391 2550 704	1	•

ECO

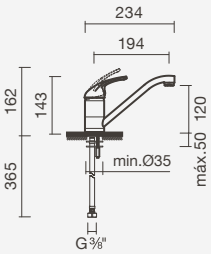

VIVA

Single lever kitchen faucet

> for kitchen sinks with a tap hole
> ceramic cartridge and orientable aerator
> pivoting upper body
> cold start function
> in the box: faucet, flexible connections and fixing kit



Reference	Weight	€
S502 0310 0012 600	2	•

ECO COLD START

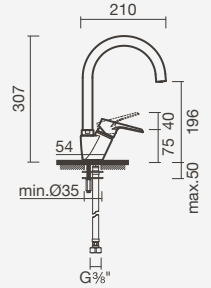

XS



Single lever kitchen faucet

> for kitchen sinks with a tap hole
> ceramic cartridge (ecological) and non-orientable aerator
> pivoting upper body
> in the box: faucet, flexible connections and fixing kit

Reference	Weight	€
S502 0230 0012 600	1	•

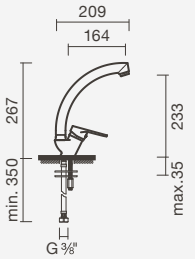

ECO



VIVA single lever kitchen faucet





Furniture, mirrors and accessories

Introduction

	Information	314
	Collection guide	316

Collection guide

	Arden	318
	Harapan	322
	Stenis	326
	Weza	330
	Yankari	334
	Tahoe	336
	Willow	342
	Willow Unik	348
	Casual	352
N	Ficus	354
N	Maple	358
	Pike	362

Mirrors

N	Scutum / Polaris / Asterion	365
	Antares / Mayara / Naos	366
	Sirius / Heka / Kuma	368
	Unuk / Vega	369

WC Accessories

N	Studio	370
N	Stout	382
N	Twig	386
N	Kin Round	392
N	Kin Square	398
	Mobil	404

Furniture, mirrors and accessories

Simplify your everyday life



Furniture

New dimension

Organize your bathroom

Whether you are either looking to design a small guest bathroom or a space for the entire family, you have a broad range of furniture, mirrors and accessories to appropriate for different specifications.

Furniture

Colours

Learn about the available options for each collection

	White	Gray	Anthracite	Wengue Gray	Textured Gray	Matte Black	Wengue	Textured Walnut	Oak
Arden	•					•			•
Harapan	•					•			•
Stenis	•			•					•
Weza				•		•			
Yankari	•			•			•		
Tahoe	•	•		•					•
Willow	•		•		•			•	
Willow Unik	•		•		•			•	
Casual	•								
Ficus	•		•		•			•	
Maple	•							•	
Pike	•		•		•			•	

Furniture

Materials and finishes

Learn which material fits your project

To help you make an educated decision about which bathroom furniture collection you should choose, we have examined our available materials:



Solid wood

Cosy and natural: solid wood has been gaining popularity. The natural variations of the wood grains (there aren´t two pieces alike) showcase their excellence. Available in oak – famously known for their resistance and longevity. However, to give you complete confidence in your choice, all of the surfaces are diligently lacquered with polyurethane varnish making them water repellent.

Available finishes:

Natural wood veneer	○
Polyurethane varnish lacquer	●
High pressure laminate	○
Melamine	○



MDF

Water resistant MDF – a high quality by-product of wood – has become one of the most popular choices for the bathroom due to its extreme durability. It is produced by agglutinating wood fibres and synthetic resins. The result is a smooth and uniform surface with a structure of outstanding dimensional stability and mechanical resistance (even when facing temperature variations and humid environments).

Available finishes:

Natural wood veneer	●
Polyurethane varnish lacquer	●
High pressure laminate	●
Melamine	○



Chipboard

This is one the most common wood by-products. It is extremely versatile and is produced from pine wood particles glued together with UF resin. The chipboard sheets used in our furniture have three layers – making them an adequate choice even for the humid environments in the bathroom – showcasing a uniform and level surface.

Available finishes:

Natural wood veneer	○
Polyurethane varnish lacquer	○
High pressure laminate	●
Melamine	○

Furniture

Technologies

Safety and comfort everyday

Picking the right furniture for the bathroom can not only drastically change the space, but also its functionality. Learn more about the integrated technologies in our furniture and their benefits for everyday life.

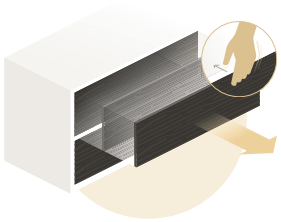

Push-open

If you are looking for a truly minimalistic solution, forget about pieces of furniture with recesses or with traditional handles. The push-open technology allows you to open and close the unit with a simple touch of pressure on the surface, without the need for accessory objects to the design.

Available in these collections:
Arden · Harapan · Stenis · Yankari Casual

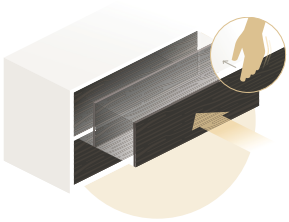

Soft-close

A banging door or drawer is an annoyance that can damage the vanity unit. The soft-close technology prevents this from happening. When the door or drawer is closed the concealed hinges or slides slow down the movement, guiding the door or drawer in a safe and silent manner until it closes without a loud thud.

Available in these collections:
Harapan · Weza · Tahoe · Willow Willow Unik · Ficus · Maple · Pike

Collection guide

Discover our furniture collections



Arden
Floor-mounted

Page 318



Harapan
Floor-mounted

Page 322



Stenis
Wall-mounted

Page 326



Weza
Floor-mounted

Page 330



Yankari
Wall-mounted

Page 334



Tahoe
Wall-mounted

Page 336

LENGTH

1400						
1200						1200 x 456
1000	1000 x 456	1000 x 456	1000 x 456	1000 x 440	1000 x 460	1000 x 456
900	900 x 456	900 x 456	900 x 456		900 x 460	
800	800 x 456	800 x 456	800 x 456	800 x 440 800 x 456	800 x 460	800 x 456
600				600 x 440		600 x 456
400						



Willow
Wall-mounted
Page 342



Willow Unik
Wall-mounted
Page 348



Casual
Wall-mounted
Page 352



Ficus
Wall-mounted
Page 354



Maple
Wall-mounted
Page 358



Pike
Wall-mounted
Page 362

LENGTH

1400	1400 x 455					
1200		1195 x 450				
1000	1000 x 455	995 x 450		995 x 450		
900					895 x 450	
800	800 x 455	795 x 450	800 x 450	795 x 450	795 x 450	
600		595 x 450	600 x 455	595 x 450	595 x 450	
400						400 x 230

Arden



ARDEN 100 floor-standing vanity unit in Matte Black - white with EVEN 100 washbasin and SUN faucet

COLOURS

Combinations

Oak - White

Matte Black - White

DIMENSIONS

1000 x 456 x 836mm
900 x 456 x 836mm
800 x 456 x 836mm

MATERIALS

Structural support feet

In 30mm solid oak - lacquered with clear matte polyurethane varnish or Matte Black glaze colouring

Doors

16mm MDF - lacquered with matte white polyurethane varnish

Structural countertop

22mm MDF - lacquered with matte white polyurethane varnish

Shelf

16mm chipboard - lined with white melamine with smooth matte finish

TECHNOLOGY

Concealed hinges with pressure activated opening (push to open)

COMPATIBILITY

Even, Velvet and Sleek solid surface washbasins (not included)

ARDEN 100





Floor-standing vanity unit 100

1000 × 456 × 836mm

> compatible with Even, Velvet and Sleek 100 recessed washbasins
> with two doors
> in the box: vanity unit and fixing kit

Oak - White	Weight	Pieces per pallet	€
S700 6800 3312 100	38	4	•
Matte Black - White			
S700 6790 3371 600	38	4	•

Solid surface washbasin 100

> recessed application: profile: 12mm
> with or without tap hole (central to the bowl), without overflow
> in the box: washbasin

EVEN 100 - with tap hole			
S202 0871 1700 000	11	1	•
EVEN 100 - without tap hole			
S202 0870 0000 000	11	1	•
VELVET 100 - with tap hole			
S202 0341 1700 000	11	1	•
VELVET 100 - without tap hole			
S202 0340 0000 000	11	1	•
SLEEK 100 - with tap hole			
S202 0261 1700 000	15	1	•
SLEEK 100 - without tap hole			
S202 0260 0000 000	15	1	•

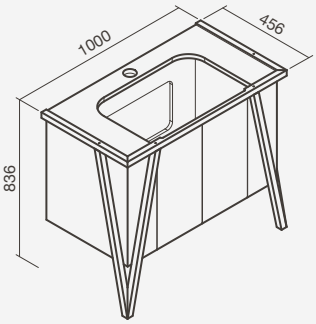

Complete set

Vanity unit + Washbasin •

ARDEN 90





Floor-standing vanity unit 90

900 × 456 × 836mm

> compatible with Even, Velvet and Sleek 90 recessed washbasins
> with two doors
> in the box: vanity unit and fixing kit

Oak - White	Weight	Pieces per pallet	€
S700 6780 3312 100	35	4	•
Matte Black - White			
S700 6770 3371 600	35	4	•

Solid surface washbasin 90

> recessed application: profile: 12mm
> with or without tap hole (central to the bowl), without overflow
> in the box: washbasin

EVEN 90 - with tap hole			
S202 0881 1700 000	10	1	•
EVEN 90 - without tap hole			
S202 0880 0000 000	10	1	•
VELVET 90 - with tap hole			
S202 0351 1700 000	10	1	•
VELVET 90 - without tap hole			
S202 0350 0000 000	10	1	•
SLEEK 90 - with tap hole			
S202 0251 1700 000	14	1	•
SLEEK 90 - without tap hole			
S202 0250 0000 000	14	1	•

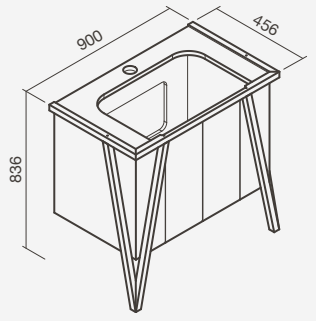

Complete set

Vanity unit + Washbasin •

ARDEN 80





Floor-standing vanity unit 80

800 × 456 × 836mm

> compatible with Even, Velvet and Sleek 80 recessed washbasins
> with two doors
> in the box: vanity unit and fixing kit

Oak - White	Weight	Pieces per pallet	€
S700 6760 3312 100	32	4	•
Matte Black - White			
S700 6750 3371 600	32	4	•

Solid surface washbasin 80

> recessed application: profile: 12mm
> with or without tap hole (central to the bowl), without overflow
> in the box: washbasin

EVEN 80 - with tap hole			
S202 0891 1700 000	9	1	•
EVEN 80 - without tap hole			
S202 0890 0000 000	9	1	•
VELVET 80 - with tap hole			
S202 0361 1700 000	9	1	•
VELVET 80 - without tap hole			
S202 0360 0000 000	9	1	•
SLEEK 80 - with tap hole			
S202 0241 1700 000	13	1	•
SLEEK 80 - without tap hole			
S202 0240 0000 000	13	1	•

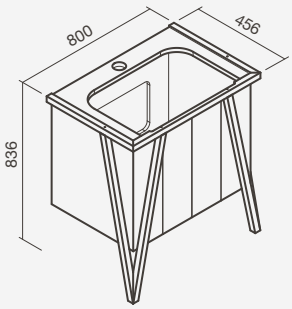

Complete set

Vanity unit + Washbasin •



ARDEN 100 floor-standing vanity unit in Matte Black - white with SLEEK 100 recessed washbasin and BALANCE faucet



ARDEN 80 floor-standing vanity unit in oak - white with SLEEK 80 recessed washbasin and BALANCE faucet and ASTERION mirror

Harapan



HARAPAN 80 floor-standing vanity unit in Matte Black - white

COLOURS

Combinations

Oak - White

Matte Black - White

DIMENSIONS

1000 x 456 x 836mm
900 x 456 x 836mm
800 x 456 x 836mm

MATERIALS

Structural support feet

In 30mm solid oak - lacquered with clear matte polyurethane varnish or Matte Black glaze colouring

Drawer and side storage

16mm MDF - lacquered with matte white polyurethane varnish

Drawer front

12mm MDF - lacquered with matte white polyurethane varnish (inside and outside)

Drawer interior

16mm chipboard - lined with white melamine with smooth matte finish

Structural countertop

22mm MDF - lacquered with matte white polyurethane varnish

TECHNOLOGY

Side spaces with hinges with pressure activated opening (push to open) and drawer with concealed slides and soft-close (pull to open)

COMPATIBILITY

Even, Velvet and Sleek solid surface washbasins (not included)

HARAPAN 100





Floor-standing vanity unit 100

1000 × 456 × 836mm

> compatible with Even, Velvet and Sleek 100 recessed washbasins
> with one drawer and two side storage spaces
> in the box: vanity unit and fixing kit

Oak - White	Weight	Pieces per pallet	€
S700 6860 2012 100	41	4	•
Matte Black - White			
S700 6850 2071 600	41	4	•

Solid surface washbasin 100

> recessed application: profile: 12mm
> with or without tap hole (central to the bowl), without overflow
> in the box: washbasin

EVEN 100 - with tap hole			
S202 0871 1700 000	11	1	•
EVEN 100 - without tap hole			
S202 0870 0000 000	11	1	•
VELVET 100 - with tap hole			
S202 0341 1700 000	11	1	•
VELVET 100 - without tap hole			
S202 0340 0000 000	11	1	•
SLEEK 100 - with tap hole			
S202 0261 1700 000	15	1	•
SLEEK 100 - without tap hole			
S202 0260 0000 000	15	1	•

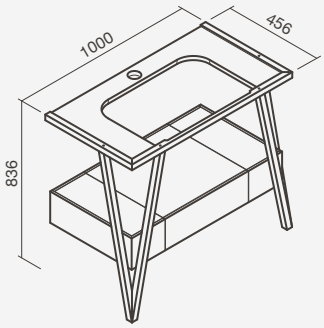

Complete set

Vanity unit + Washbasin •

HARAPAN 90





Floor-standing vanity unit 90

900 × 456 × 836mm

> compatible with Even, Velvet and Sleek 90 recessed washbasins
> with one drawer and two side storage spaces
> in the box: vanity unit and fixing kit

Oak - White	Weight	Pieces per pallet	€
S700 6840 2012 100	38	4	•
Matte Black - White			
S700 6830 2071 600	38	4	•

Solid surface washbasin 90

> recessed application: profile: 12mm
> with or without tap hole (central to the bowl), without overflow
> in the box: washbasin

EVEN 90 - with tap hole			
S202 0881 1700 000	10	1	•
EVEN 90 - without tap hole			
S202 0880 0000 000	10	1	•
VELVET 90 - with tap hole			
S202 0351 1700 000	10	1	•
VELVET 90 - without tap hole			
S202 0350 0000 000	10	1	•
SLEEK 90 - with tap hole			
S202 0251 1700 000	14	1	•
SLEEK 90 - without tap hole			
S202 0250 0000 000	14	1	•

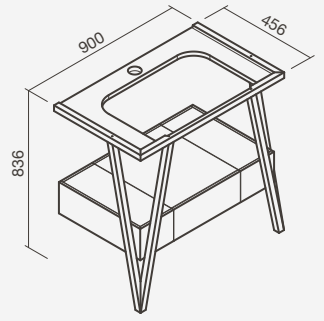

Complete set

Vanity unit + Washbasin •

HARAPAN 80





Floor-standing vanity unit 80

800 × 456 × 836mm

> compatible with Even, Velvet and Sleek 80 recessed washbasins
> with one drawer and two side storage spaces
> in the box: vanity unit and fixing kit

Oak - White	Weight	Pieces per pallet	€
S700 6820 2012 100	35	4	•
Matte Black - White			
S700 6810 2071 600	35	4	•

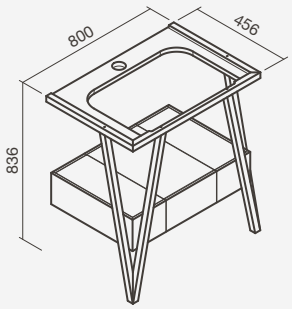

Solid surface washbasin 80

> recessed application: profile: 12mm
> with or without tap hole (central to the bowl), without overflow
> in the box: washbasin

EVEN 80 - with tap hole			
S202 0891 1700 000	9	1	•
EVEN 80 - without tap hole			
S202 0890 0000 000	9	1	•
VELVET 80 - with tap hole			
S202 0361 1700 000	9	1	•
VELVET 80 - without tap hole			
S202 0360 0000 000	9	1	•
SLEEK 80 - with tap hole			
S202 0241 1700 000	13	1	•
SLEEK 80 - without tap hole			
S202 0240 0000 000	13	1	•

Complete set

Vanity unit + Washbasin •



HARAPAN 100 floor-standing vanity unit in oak - white with SLEEK 100 recessed washbasin and BALANCE faucet



HARAPAN 100 floor-standing vanity unit in oak - white

Stenis



STENIS 80 wall-mounted vanity unit in oak - white with VELVET 80 washbasin and SELEKT faucet

COLOURS

Combinations

Oak - White

Gray Wengue - White

DIMENSIONS

1000 x 456 x 450mm
900 x 456 x 450mm
800 x 456 x 450mm

MATERIALS

Structure

16mm MDF - lined with oak or gray wengue melamine with textured matte finish

Drawer exterior and front

12mm MDF - lacquered with matte white polyurethane varnish

Drawer interior

12mm chipboard - lined with white melamine with smooth matte finish

TECHNOLOGY

Concealed slides with pressure activated opening (push to open)

COMPATIBILITY

Even, Velvet and Sleek solid surface washbasins (not included)

STENIS 100



Wall-mounted vanity unit 100

1000 × 456 × 450mm

> compatible with Even, Velvet and Sleek 100 wall-mounted washbasins
> with one drawer
> in the box: vanity unit and fixing kit

Oak - White	Weight	Pieces per pallet	€
S700 6740 1715 500	33	6	•
Gray Wengue - White			
S700 6730 1704 100	33	6	•



Solid surface washbasin 100

> wall-mounted application- profile: 125mm
> with or without tap hole (central to the bowl), without overflow
> in the box: washbasin and fixing kit

EVEN 100 - with tap hole			
S202 0971 1700 000	15	1	•
EVEN 100 - without tap hole			
S202 0970 0000 000	15	1	•
SLEEK 100 - with tap hole			
S202 0301 1700 000	21	1	•
SLEEK 100 - without tap hole			
S202 0300 0000 000	21	1	•
VELVET 100 - with tap hole			
S202 0451 1700 000	15	1	•
VELVET 100 - without tap hole			
S202 0450 0000 000	15	1	•

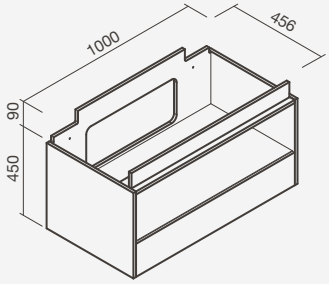

Complete set

Vanity unit + Washbasin •

STENIS 90



Wall-mounted vanity unit 90

900 × 456 × 450mm

> compatible with Even, Velvet and Sleek 90 wall-mounted washbasins
> with one drawer
> in the box: vanity unit and fixing kit

Oak - White	Weight	Pieces per pallet	€
S700 6720 1715 500	31	6	•
Gray Wengue - White			
S700 6710 1704 100	31	6	•



Solid surface washbasin 90

> wall-mounted application- profile: 125mm
> with or without tap hole (central to the bowl), without overflow
> in the box: washbasin and fixing kit

EVEN 90 - with tap hole			
S202 1001 1700 000	14	1	•
EVEN 90 - without tap hole			
S202 1000 0000 000	14	1	•
SLEEK 90 - with tap hole			
S202 0291 1700 000	20	1	•
SLEEK 90 - without tap hole			
S202 0290 0000 000	20	1	•
VELVET 90 - with tap hole			
S202 0481 1700 000	13	1	•
VELVET 90 - without tap hole			
S202 0480 0000 000	13	1	•

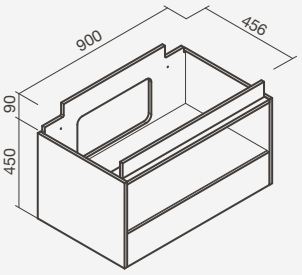

Complete set

Vanity unit + Washbasin •

STENIS 80



Wall-mounted vanity unit 80

800 × 456 × 450mm

> compatible with Even, Velvet and Sleek 80 wall-mounted washbasins
> with one drawer
> in the box: vanity unit and fixing kit

Oak - White	Weight	Pieces per pallet	€
S700 6700 1715 500	30	6	•
Gray Wengue - White			
S700 6690 1704 100	30	6	•



Solid surface washbasin 80

> wall-mounted application- profile: 125mm
> with or without tap hole (central to the bowl), without overflow
> in the box: washbasin and fixing kit

EVEN 80 - with tap hole			
S202 1011 1700 000	13	1	•
EVEN 80 - without tap hole			
S202 1010 0000 000	13	1	•
SLEEK 80 - with tap hole			
S202 0281 1700 000	18	1	•
SLEEK 80 - without tap hole			
S202 0280 0000 000	18	1	•
VELVET 80 - with tap hole			
S202 0491 1700 000	12	1	•
VELVET 80 - without tap hole			
S202 0490 0000 000	12	1	•

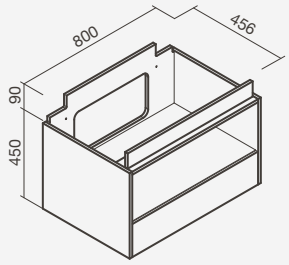

Complete set

Vanity unit + Washbasin •



STENIS 100 wall-mounted vanity unit in gray wengue - white with VELVET 100 washbasin and SELEKT faucet



STENIS 100 wall-mounted vanity unit in gray wengue - white with VELVET 100 washbasin and SELEKT faucet

Weza



WEZA 80 floor-standing vanity unit in Matte Black - gray wengue with VELVET 80 washbasin and UNIC faucet

COLOURS

Combinations

Matte Black - Gray Wengue

DIMENSIONS

Weza + Even / Velvet / Sleek

800 x 456 x 700mm
800 x 456 x 830mm

Weza + Albus

1000 x 440 x 700mm
800 x 440 x 700mm
600 x 440 x 700mm

MATERIALS

Structure

20mm brushed stainless steel frame - lacquered with Matte Black polyurethane varnish

Drawer exterior and front

19+16mm chipboard (front and sides) - lined with gray wengue melamine with a glossy finish

Drawer interior

Steel - lacquered with gray glossy polyurethane varnish

TECHNOLOGY

Concealed slides with soft close system (pull to open)

COMPATIBILITY

Even, Velvet and Sleek solid surface washbasins or Albus vitreous china washbasins (not included)

WEZA 80 - WALL-MOUNTED WASHBASINS EVEN / VELVET / SLEEK 80



Floor-standing vanity unit 80

800 × 456 × 700mm

> compatible with solid surface wall-mounted washbasins Even, Velvet and Sleek 80 - profile: 125mm (not included)
> with one drawer
> in the box: vanity unit and fixing kit

Matte Black - Gray Wengue	Weight	Pieces per pallet	€
S702 0180 1804 100	25	4	•

Solid surface washbasin 80

> wall-mounted application - profile: 125mm
> with or without tap hole (central to the bowl), without overflow
> in the box: washbasin and fixing kit

EVEN 80 - with tap hole			
S202 1011 1700 000	13	1	•
EVEN 80 - without tap hole			
S202 1010 0000 000	13	1	•
VELVET 80 - with tap hole			
S202 0491 1700 000	12	1	•
VELVET 80 - without tap hole			
S202 0490 0000 000	12	1	•
SLEEK 80 - with tap hole			
S202 0281 1700 000	18	1	•
SLEEK 80 - without tap hole			
S202 0280 0000 000	18	1	•

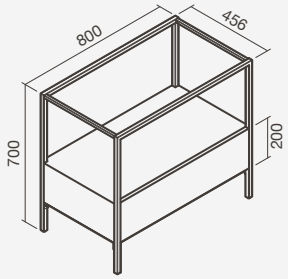

Complete set

Vanity unit + Washbasin •

WEZA 80 - RECESSED WASHBASINS EVEN / VELVET / SLEEK 80



Floor-standing vanity unit 80

800 × 456 × 830mm

> compatible with solid surface recessed washbasins Even, Velvet and Sleek 80 - profile: 12mm (not included)
> with one drawer
> in the box: vanity unit and fixing kit

Matte Black - Gray Wengue	Weight	Pieces per pallet	€
S702 0190 1804 100	25	4	•

Solid surface washbasin 80

> recessed application - profile: 12mm
> with or without tap hole (central to the bowl), without overflow
> in the box: washbasin

EVEN 80 - with tap hole			
S202 0891 1700 000	9	1	•
EVEN 80 - without tap hole			
S202 0890 0000 000	9	1	•
VELVET 80 - with tap hole			
S202 0361 1700 000	9	1	•
VELVET 80 - without tap hole			
S202 0360 0000 000	9	1	•
SLEEK 80 - with tap hole			
S202 0241 1700 000	13	1	•
SLEEK 80 - without tap hole			
S202 0240 0000 000	13	1	•

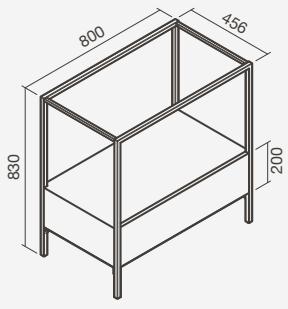

Complete set

Vanity unit + Washbasin •

WEZA 100 - WASHBASIN ALBUS 100



Floor-standing vanity unit 100

1000 × 440 × 700mm

> compatible with Albus 101 countertop vitreous china washbasin
> with one drawer
> in the box: vanity unit and fixing kit

Matte Black - Gray Wengue	Weight	Pieces per pallet	€
S700 5750 1815 400	29	4	•

Add-ons

ALBUS 101 vitreous china washbasin

> countertop application
> with tap hole (central to the bowl), with overflow
> in the box: washbasin

With soap ledges			
S102 0091 6400 000	29	21	•

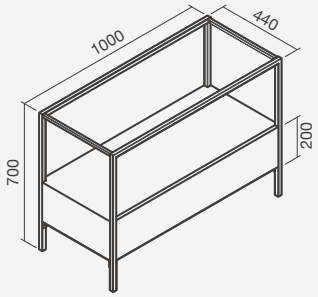

Complete set

Vanity unit + Washbasin •

WEZA 80 - WASHBASIN ALBUS 80



Floor-standing vanity unit 80

800 × 440 × 700mm

> compatible with Albus 81 countertop vitreous china washbasin
> with one drawer
> in the box: vanity unit and fixing kit

Matte Black - Gray Wengue	Weight	Pieces per pallet	€
S700 5740 1815 400	25	4	•

Add-ons

ALBUS 81 vitreous china washbasin

> countertop application
> with tap hole (central to the bowl), with overflow
> in the box: washbasin

With soap ledges			
S102 0021 6400 000	24	27	•

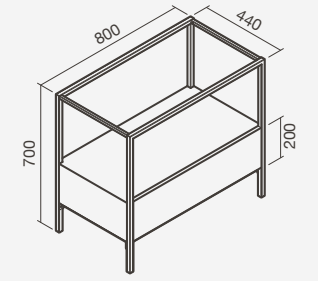

Complete set

Vanity unit + Washbasin •

WEZA 60 - WASHBASIN ALBUS 60



Floor-standing vanity unit 60

600 × 440 × 700mm

> compatible with Albus 61 countertop vitreous china washbasin
> with one drawer
> in the box: vanity unit and fixing kit

Matte Black - Gray Wengue	Weight	Pieces per pallet	€
S700 5730 1815 400	23	4	•

Add-ons

ALBUS 61 vitreous china washbasin

> countertop application
> with tap hole (central to the bowl), with overflow
> in the box: washbasin

With soap ledges			
S100 8511 6400 000	16	32	•
Without soap ledges			
S100 8518 0800 000	18	32	•



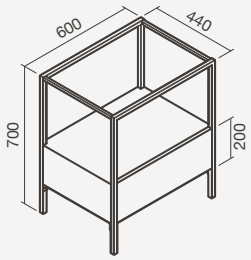

Complete set
Vanity unit + Washbasin •



WEZA 80 floor-standing vanity unit in matte black - gray wengue with SLEEK 80 wall-mounted washbasin and matte black UNIC mixer

Yankari



YANKARI 80 wall-mounted vanity unit in white - gray wengue with ARENA 38 washbasin and UNIC faucet

COLOURS

Combinations

White - Wengue

White - Gray Wengue

DIMENSIONS

1000 x 460 x 440mm
900 x 460 x 440mm
800 x 460 x 440mm

MATERIALS

Structure

16mm MDF and 30mm MDF on the countertop - lacquered with white glossy polyurethane varnish

Drawers front

16mm MDF - lined with gray wengue or wengue wood composite veneer lacquered with clear matte polyurethane varnish

Drawers interior

16mm chipboard - lined with gray melamine with smooth matte finish

TECHNOLOGY

Concealed slides with pressure activated opening (push to open)

COMPATIBILITY

Countertop washbasins

YANKARI 100





Wall-mounted vanity unit 100

1000 × 460 × 440mm

> compatible with countertop washbasins:
Helm 47, Arena 38 and 70; Elipse 63; Orbit 44 *;
Pop Art 51, Trik 73 and Halo(s)
> with two drawers
> in the box: vanity unit and fixing kit

White - Wengue	Weight	Pieces per pallet	€
S700 5810 3020 100	49	6	•
White - Gray Wengue			
S700 5810 3015 400	49	6	•

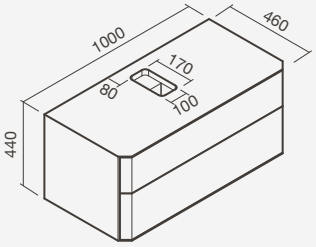

* Washbasin depth slightly longer
compared to countertop / vanity unit

YANKARI 90





Wall-mounted vanity unit 90

900 × 460 × 440mm

> compatible with countertop washbasins:
Helm 47, Arena 38 and 70; Elipse 63; Orbit 44 *;
Pop Art 51, Trik 73 and Halo(s)
> with two drawers
> in the box: vanity unit and fixing kit

White - Wengue	Weight	Pieces per pallet	€
S700 5800 3020 100	43	6	•
White - Gray Wengue			
S700 5800 3015 400	43	6	•

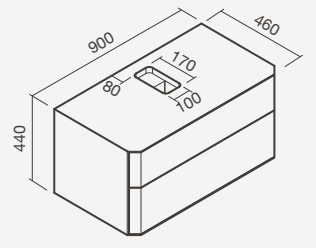

* Washbasin depth slightly longer
compared to countertop / vanity unit

YANKARI 80





Wall-mounted vanity unit 80

800 × 460 × 440mm

> compatible with countertop washbasins:
Helm 47, Arena 38 and 70; Elipse 63; Orbit 44 *;
Pop Art 51, Trik 73 and Halo(s)
> with two drawers
> in the box: vanity unit and fixing kit

White - Wengue	Weight	Pieces per pallet	€
S700 5790 3020 100	38	6	•
White - Gray Wengue			
S700 5790 3015 400	38	6	•

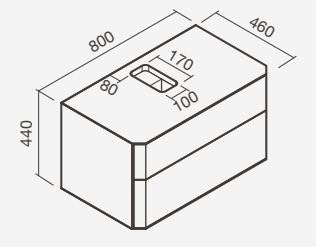

* Washbasin depth slightly longer
compared to countertop / vanity unit

Tahoe



TAHOE 60 wall-mounted vanity unit in white - white with SILK faucet and MAYARA mirror

COLOURS

Combinations

White - White

White - Gray

White - Oak

White - Gray Wengue

DIMENSIONS

1200 x 456 x 490mm
1000 x 456 x 490mm
800 x 456 x 490mm
600 x 456 x 490mm

MATERIALS

Structure

16mm MDF - lacquered with glossy white polyurethane varnish

Drawers front

16mm MDF - lacquered with glossy white or gray polyurethane varnish or lined with oak or gray wengue wood composite veener lacquered with clear matte polyurethane varnish

Drawers interior

16mm chipboard - lined with gray melamine with smooth matte finish

TECHNOLOGY

Concealed slides with soft close system (pull to open)

COMPATIBILITY

Even, Velvet and Sleek recessed solid surface washbasins (not included), Alur recessed vitreous china washbasins (not included) or countertop washbasins (console required)

TAHOE 120










Wall-mounted vanity unit 120

1200 × 456 × 490mm

> compatible with Even and Velvet 120 solid surface washbasins and Alur 121 vitreous china double washbasin
> with two drawers
> in the box: vanity unit and fixing kit

White - White	Weight	Pieces per pallet	€
S702 0120 3100 000	48	6	•
White - Gray			
S702 0120 3102 200	48	6	•
White - Oak			
S702 0120 3165 200	48	6	•
White - Gray Wengue			
S702 0120 3145 000	48	6	•

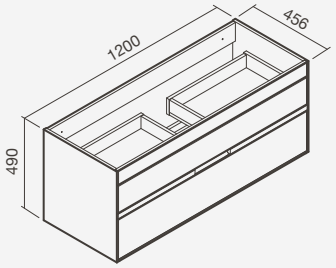

Add-ons

Solid surface washbasin 120

> recessed application - profile: 12mm
> with or without tap hole (central to bowl), without overflow
> in the box: washbasin

EVEN 120 - with tap hole			
S202 0861 1700 000	13	1	•
EVEN 120 - without tap hole			
S202 0860 0000 000	13	1	•
VELVET 120 - with tap hole			
S202 0331 1700 000	12	1	•
VELVET 120 - without tap hole			
S202 0330 0000 000	12	1	•

ALUR 121 vitreous china double washbasin

> recessed application (in countertop)
> with tap holes (central to bowls), with overflow
> in the box: washbasin

N	S102 0830 0000 005	23	10	•

Console for countertop washbasins

> compatible with vanity units Tahoe 120
> compatible with countertop washbasins: Helm 47, Arena 38 e 70; Elipse 63; Orbit 44*; Pop Art 51, Trik 73 and Halo(s)
> in the box: console

White			
S702 0130 0000 000	6	12	•

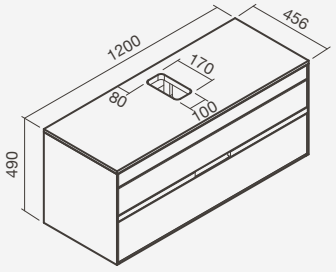

* Washbasin depth slightly longer compared to countertop / vanity unit

Complete set
Vanity unit + Washbasin •

TAHOE 100










Wall-mounted vanity unit 100

1000 × 456 × 490mm

> compatible with Even, Velvet and Sleek 100 solid surface washbasins and Alur 101 vitreous china washbasin
> with two drawers
> in the box: vanity unit and fixing kit

White - White	Weight	Pieces per pallet	€
S700 5630 3100 000	39	6	•
White - Gray			
S700 5630 3102 200	39	6	•
White - Oak			
S700 5630 3165 200	39	6	•
White - Gray Wengue			
S700 5630 3145 000	39	6	•

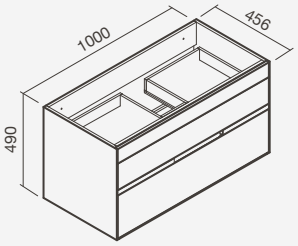

Add-ons

Solid surface washbasin 100

> recessed application - profile: 12mm
> with or without tap hole (central to bowl), without overflow
> in the box: washbasin

EVEN 100 - with tap hole			
S202 0871 1700 000	11	1	•
EVEN 100 - without tap hole			
S202 0870 0000 000	11	1	•
VELVET 100 - with tap hole			
S202 0341 1700 000	11	1	•
VELVET 100 - without tap hole			
S202 0340 0000 000	11	1	•
SLEEK 100 - with tap hole			
S202 0261 1700 000	15	1	•
SLEEK 100 - without tap hole			
S202 0260 0000 000	15	1	•

ALUR 101 vitreous china washbasin

> recessed application (in countertop)
> with tap hole (central to bowl), with overflow
> in the box: washbasin

N	S102 0830 0000 003	17	12	•

Console for countertop washbasins

> compatible with vanity units Tahoe 100
> compatible with countertop washbasins: Helm 47, Arena 38 e 70; Elipse 63; Orbit 44*; Pop Art 51, Trik 73 and Halo(s)
> in the box: console

White			
S700 5602 8000 000	6	12	•

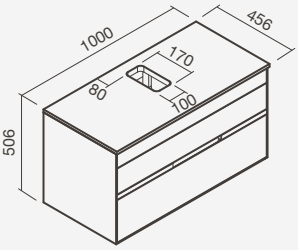

* Washbasin depth slightly longer compared to countertop / vanity unit

Complete set
Vanity unit + Washbasin •

TAHOE 80










Wall-mounted vanity unit 80

800 × 456 × 490mm

> compatible with Even, Velvet and Sleek 80 solid surface washbasins and Alur 81 vitreous china washbasin
> with two drawers
> in the box: vanity unit and fixing kit

White - White	Weight	Pieces per pallet	€
S700 5620 3100 000	31	6	•
White - Gray			
S700 5620 3102 200	31	6	•
White - Oak			
S700 5620 3165 200	31	6	•
White - Gray Wengue			
S700 5620 3145 000	31	6	•

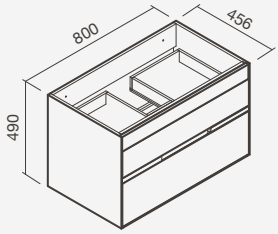

Add-ons

Solid surface washbasin 80

> recessed application - profile: 12mm
> with or without tap hole (central to bowl), without overflow
> in the box: washbasin

EVEN 80 - with tap hole			
S202 0891 1700 000	9	1	•
EVEN 80 - without tap hole			
S202 0890 0000 000	9	1	•
VELVET 80 - with tap hole			
S202 0361 1700 000	9	1	•
VELVET 80 - without tap hole			
S202 0360 0000 000	9	1	•
SLEEK 80 - with tap hole			
S202 0241 1700 000	13	1	•
SLEEK 80 - without tap hole			
S202 0240 0000 000	13	1	•

ALUR 81 vitreous china washbasin

> recessed application (in countertop)
> with tap hole (central to bowl), with overflow
> in the box: washbasin

N	S102 0830 0000 002	16	18	•

Console for countertop washbasins

> compatible with vanity units Tahoe 80
> compatible with countertop washbasins: Helm 47, Arena 38 e 70; Elipse 63; Orbit 44*; Pop Art 51, Trik 73 and Halo(s)
> in the box: console

White			
S700 5582 8000 000	5	12	•

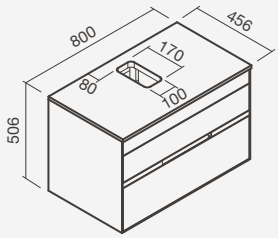

* Washbasin depth slightly longer compared to countertop / vanity unit

Complete set	
Vanity unit + Washbasin	•



TAHOE 80 wall-mounted vanity unit in white - gray wengue with SILK faucet and UNUK mirror

TAHOE 60










Wall-mounted vanity unit 60

600 × 456 × 490mm

> compatible with Velvet and Sleek 60 solid surface washbasins and Alur 61 vitreous china washbasin
> with two drawers
> in the box: vanity unit and fixing kit

White - White	Weight	Pieces per pallet	€
S700 5610 3100 000	24	6	•
White - Gray			
S700 5610 3102 200	24	6	•
White - Oak			
S700 5610 3165 200	24	6	•
White - Gray Wengue			
S700 5610 3145 000	24	6	•

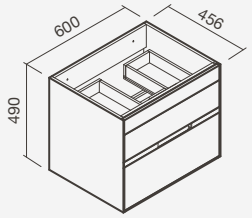

Add-ons

Solid surface washbasin 60

> recessed application - profile: 12mm
> with or without tap hole (central to bowl), without overflow
> in the box: washbasin

VELVET 60 - with tap hole			
S202 0371 1700 000	7	1	•
VELVET 60 - without tap hole			
S202 0370 0000 000	7	1	•
SLEEK 60 - with tap hole			
S202 0231 1700 000	10	1	•
SLEEK 60 - without tap hole			
S202 0230 0000 000	10	1	•

ALUR 61 vitreous china washbasin

> recessed application (in countertop)
> with tap hole (central to bowl), with overflow
> in the box: washbasin

N	S102 0830 0000 000	12	24	•

Console for countertop washbasins

> compatible with vanity units Tahoe 60
> compatible with countertop washbasins: Helm 47, Arena 38 and Pop Art 51
> in the box: console

White			
S700 5572 8000 000	5	12	•

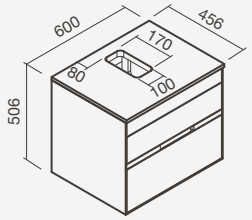

Complete set	
Vanity unit + Washbasin	•

Willow



WILLOW 80 white vanity unit with HELM *round* washbasin, NORM high spout faucet and POLARIS mirror

COLOURS
Combinations

White

Anthracite

Textured gray

Textured walnut

DIMENSIONS
1400 x 455 x 585 mm
1000 x 455 x 585 mm
800 x 455 x 585 mm

MATERIALS
Countertop
19mm MDF - laquered with white or anthracite glossy polyurethane varnish, or 19mm chipboad - lined with textured gray or walnut melamine with a textured matte finish

Structure and drawers and shelves exterior
16 mm chipboard - lined with white or anthracite melamine with smooth and glossy finish, or textured gray or walnut melamine with textured matte finish

Drawers interior
16 mm chipboard - lined with textile PVC with imitation leather finish

TECHNOLOGY
Concealed slides with soft close system (pull to open)

COMPATIBILITY
Countertop washbasins in solid surface or vitreous china (not included)

WILLOW 140














Wall-mounted vanity unit 140

1400 × 455 × 585 mm

> compatible with one or two countertop washbasins
> with four drawers and two shelves
> in the box: two 60 modules (drawers), one 20 module (shelves), one countertop and fixing kits

White	Weight	Pieces per pallet	€
S702 0630 3100 000	62	1	•
Anthracite			
S702 0630 3105 900	62	1	•
Textured gray			
S702 0630 3104 100	62	1	•
Textured walnut			
S702 0630 3103 500	62	1	•

Add-ons

HELM solid surface washbasins

> countertop application
> without tap hole, without overflow
> in the box: washbasin

HELM (round)			
S202 0840 0000 000	5	1	•
HELM (square)			
S202 0830 0000 000	5	1	•

Vitreous china washbasins

> countertop application
> without tap hole, without overflow
> in the box: washbasin

HALO Round - white			
S102 0905 0400 000	8	48	•
HALO Round - matte white			
S102 0905 0406 400	8	48	•
HALO Round - matte black			
S102 0905 0471 600	8	48	•
HALO Square - white			
S102 0915 0400 000	10	48	•
HALO Square - matte white			
S102 0915 0406 400	10	48	•
HALO Square - matte black			
S102 0915 0471 600	10	48	•
ORBIT 44			
S100 1305 0400 000	11	42	•
ARENA 38			
S100 0905 0400 000	8	39	•
CUP			
S100 0995 0400 000	5	48	•

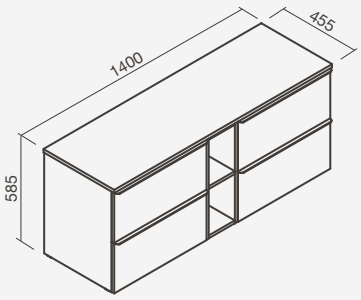

WILLOW 100










Wall-mounted vanity unit 100

1000 × 455 × 585 mm

> compatible with one countertop washbasin
> with two drawers and two shelves
> in the box: one 80 module (drawers), one 20 module (shelves), one countertop and fixing kits

White	Weight	Pieces per pallet	€
S702 0630 3100 003	38	1	•
Anthracite			
S702 0630 3105 903	38	1	•
Textured gray			
S702 0630 3104 103	38	1	•
Textured walnut			
S702 0630 3103 503	38	1	•

Add-ons

HELM solid surface washbasins

> countertop application
> without tap hole, without overflow
> in the box: washbasin

HELM (round)			
S202 0840 0000 000	5	1	•
HELM (square)			
S202 0830 0000 000	5	1	•

Vitreous china washbasins

> countertop application
> without tap hole, without overflow
> in the box: washbasin

HALO Round - white			
S102 0905 0400 000	8	48	•
HALO Round - matte white			
S102 0905 0406 400	8	48	•
HALO Round - matte black			
S102 0905 0471 600	8	48	•
HALO Square - white			
S102 0915 0400 000	10	48	•
HALO Square - matte white			
S102 0915 0406 400	10	48	•
HALO Square - matte black			
S102 0915 0471 600	10	48	•
ORBIT 44			
S100 1305 0400 000	11	42	•
ARENA 38			
S100 0905 0400 000	8	39	•
CUP			
S100 0995 0400 000	5	48	•

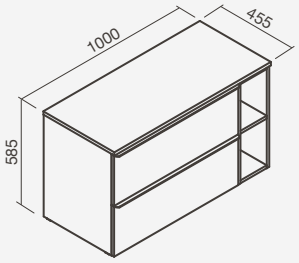

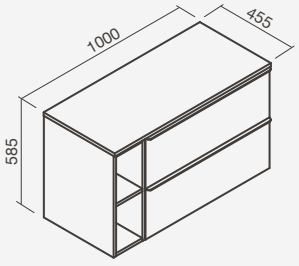



WILLOW 140 textured gray vanity unit with HELM *square* washbasins, NORM high spout faucets and POLARIS mirror



WILLOW 140 textured walnut vanity unit with HELM *square* washbasins, NORM high spout faucets and POLARIS mirror

WILLOW 80










Wall-mounted vanity unit 80

800 × 455 × 585 mm

> compatible with one countertop washbasin
> with two drawers and two shelves
> in the box: one 60 module (drawers), one 20 module (shelves), one countertop and fixing kits

White	Weight	Pieces per pallet	€
S702 0630 3100 005	31	1	•
Anthracite			
S702 0630 3105 905	31	1	•
Textured gray			
S702 0630 3104 105	31	1	•
Textured walnut			
S702 0630 3103 505	31	1	•

Add-ons

HELM solid surface washbasins

> countertop application
> without tap hole, without overflow
> in the box: washbasin

	HELM (round)			
	S202 0840 0000 000	5	1	•
	HELM (square)			
	S202 0830 0000 000	5	1	•

Vitreous china washbasins

> countertop application
> without tap hole, without overflow
> in the box: washbasin

N	**HALO Round - white**			
	S102 0905 0400 000	8	48	•
N	**HALO Round - matte white**			
	S102 0905 0406 400	8	48	•
N	**HALO Round - matte black**			
	S102 0905 0471 600	8	48	•
N	**HALO Square - white**			
	S102 0915 0400 000	10	48	•
N	**HALO Square - matte white**			
	S102 0915 0406 400	10	48	•
N	**HALO Square - matte black**			
	S102 0915 0471 600	10	48	•
	ORBIT 44			
	S100 1305 0400 000	11	42	•
	ARENA 38			
	S100 0905 0400 000	8	39	•
	CUP			
	S100 0995 0400 000	5	48	•

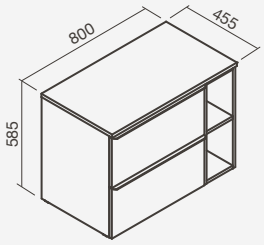

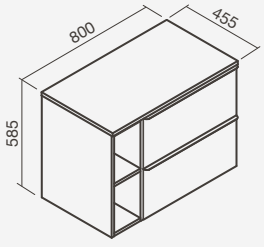

Willow Unik



WILLOW UNIK 80 anthracite vanity unit, NORM faucet and NAOS mirror

COLOURS
Combinations

White

Anthracite

Textured gray

Textured walnut

DIMENSIONS
1195 x 450 x 565 mm
995 x 450 x 565 mm
795 x 450 x 565 mm
595 x 450 x 565 mm

MATERIALS
Structure and drawers exterior
16 mm chipboard - lined with white or anthracite melamine with smooth and glossy finish, or gray or walnut melamine with a textured matte finish

Drawers interior
16 mm chipboard - lined with textile PVC with imitation leather finish

TECHNOLOGY
Concealed slides with soft close system (pull to open)

COMPATIBILITY
Recessed washbasins in vitreous china (not included)

WILLOW UNIK 120






Wall-mounted vanity unit 120

1195 × 450 × 565 mm

> compatible with Alur 121 vitreous china recessed washbasin
> with four drawers
> in the box: vanity units and fixing kits

White	Weight	Pieces per pallet	€
S702 0440 3100 001	44	6	•
Anthracite			
S702 0440 3105 901	44	6	•
Textured gray			
S702 0440 3104 101	44	6	•
Textured walnut			
S702 0440 3103 501	44	6	•

Add-ons

ALUR 121 vitreous china washbasin

> recessed application (in countertop)
> with tap holes (central to bowls), with overflow
> in the box: washbasin

N	S102 0830 0000 005	23	10	•

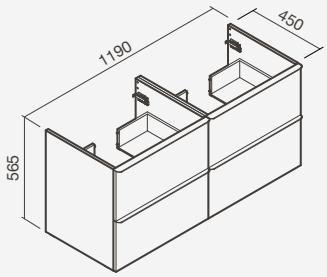

Complete set

Vanity unit + Washbasin •

WILLOW UNIK 100






Wall-mounted vanity unit 100

995 × 450 × 565 mm

> compatible with Alur 101 vitreous china recessed washbasin
> with two drawers
> in the box: vanity unit and fixing kit

White	Weight	Pieces per pallet	€
S702 0420 3100 000	32	6	•
Anthracite			
S702 0420 3105 900	32	6	•
Textured gray			
S702 0420 3104 100	32	6	•
Textured walnut			
S702 0420 3103 500	32	6	•

Add-ons

ALUR 101 vitreous china washbasin

> recessed application (in countertop)
> with tap hole (central to bowl), with overflow
> in the box: washbasin

N	S102 0830 0000 003	17	12	•

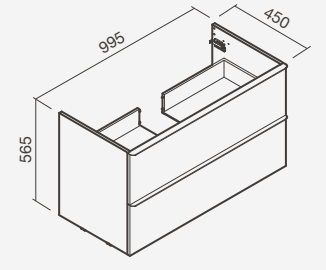

Complete set

Vanity unit + Washbasin •

WILLOW UNIK 80






Wall-mounted vanity unit 80

795 × 450 × 565 mm

> compatible with Alur 81 vitreous china recessed washbasin
> with two drawers
> in the box: vanity unit and fixing kit

White	Weight	Pieces per pallet	€
S702 0430 3100 000	25	6	•
Anthracite			
S702 0430 3105 900	25	6	•
Textured gray			
S702 0430 3104 100	25	6	•
Textured walnut			
S702 0430 3103 500	25	6	•

Add-ons

ALUR 81 vitreous china washbasin

> recessed application (in countertop)
> with tap hole (central to bowl), with overflow
> in the box: washbasin

N	S102 0830 0000 002	16	18	•

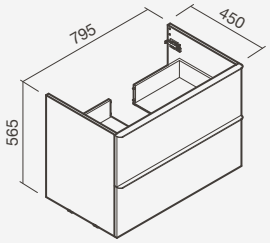

Complete set

Vanity unit + Washbasin •

WILLOW UNIK 60






Wall-mounted vanity unit 60

595 × 450 × 565 mm

> compatible with Alur 61 vitreous china recessed washbasin
> with two drawers
> in the box: vanity unit and fixing kit

White	Weight	Pieces per pallet	€
S702 0440 3100 000	22	6	•
Anthracite			
S702 0440 3105 900	22	6	•
Cinza texturado			
S702 0440 3104 100	22	6	•
Textured walnut			
S702 0440 3103 500	22	6	•

Add-ons

ALUR 61 vitreous china washbasin

> recessed application (in countertop)
> with tap hole (central to bowl), with overflow
> in the box: washbasin

N	S102 0830 0000 000	12	24	•

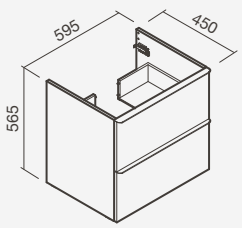

Complete set

Vanity unit + Washbasin •



WILLOW UNIK 120 white vanity unit with ALUR 121 washbasin, NORM faucets and POLARIS mirror

Casual



CASUAL 80 vanity unit with ALBUS 81 countertop washbasin and BALANCE faucet

COLOURS

Combinations

White

DIMENSIONS

800 x 450 x 282mm
600 x 455 x 282mm

MATERIALS

Structure

19mm MDF - lacquered with white glossy polyurethane varnish

Drawer interior

16mm chipboard - lined with gray melamine with smooth matte finish

TECHNOLOGY

Concealed slides with pressure activated opening (push to open)

STANDARDS

Meets standard requirements of EN14749-2005

COMPATIBILITY

Albus vitreous china countertop washbasins (not included)

CASUAL 80



Wall-mounted vanity unit 80

800 × 450 × 282mm

> compatible with Albus 81 countertop washbasin
> with one drawer
> in the box: vanity unit and fixing kit

Reference	Weight	Pieces per pallet	€
S700 4880 1700 001	20	10	•

Add-ons

ALBUS 81 vitreous china washbasin

> countertop application
> with tap hole (central to the bowl), with overflow
> in the box: washbasin

S102 0021 6400 000	24	27	•

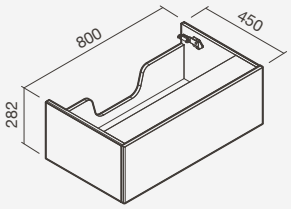

Complete set
Vanity unit + Washbasin •

CASUAL 60



Wall-mounted vanity unit 60

600 × 455 × 282mm

> compatible with Albus 61 countertop washbasin
> with one drawer
> in the box: vanity unit and fixing kit

Reference	Weight	Pieces per pallet	€
S700 4870 1700 001	15	16	•

Add-ons

ALBUS 61 vitreous china washbasin

> countertop application
> with tap hole (central to the bowl), with overflow
> in the box: washbasin

S100 8511 6400 000	16	32	•

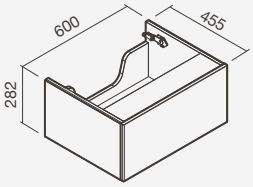

Complete set
Vanity unit + Washbasin •

Ficus



FICUS 80 textured gray wall-mounted vanity unit with PRIM faucet

COLOURS
Combinations

White

Anthracite

Textured gray

Textured walnut

DIMENSIONS
995 x 450 x 565 mm
795 x 450 x 565 mm
595 x 450 x 565 mm

MATERIALS
Structure and drawer exterior
16 mm chipboard - lined with white or anthracite melamine with smooth and glossy finish, or textured gray or walnut melamine with textured matte finish

Drawers interior
16 mm chipboard - lined with textile PVC with gray finish

Handles
Anodized aluminum - with smooth satin finish

STORAGE
Cabinet with one fixed shelf and two adjustable shelves

TECHNOLOGY
Concealed slides with soft close system (pull to open)

COMPATIBILITY
Vitreous china recessed washbasins, with tap hole and overflow (included)

FICUS 100






Wall-mounted vanity unit 100 + Alur 101 washbasin

995 × 450 × 565 mm

> compatible with Alur 101 vitreous china recessed washbasin (included)
> with two drawers
> in the box: vanity unit, washbasin and fixing kit

White	Weight	Pieces per pallet	€
S702 0550 3100 001	32	6	•
Anthracite			
S702 0550 3105 901	32	6	•
Textured gray			
S702 0550 3104 101	32	6	•
Textured walnut			
S702 0550 3103 501	32	6	•

Complements

Support feet

> height: 270mm
> in the box: support feet and fixing kit

N	S702 0730 0012 600	1	-	•

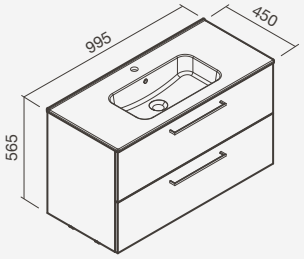

FICUS 80






Wall-mounted vanity unit 80 + Alur 81 washbasin

795 × 450 × 565 mm

> compatible with Alur 81 vitreous china recessed washbasin (included)
> with two drawers
> in the box: vanity unit, washbasin and fixing kit

White	Weight	Pieces per pallet	€
S702 0400 3100 001	25	6	•
Anthracite			
S702 0400 3105 901	25	6	•
Textured gray			
S702 0400 3104 101	25	6	•
Textured walnut			
S702 0400 3103 501	25	6	•

Complements

Support feet

> height: 270mm
> in the box: support feet and fixing kit

N	S702 0730 0012 600	1	-	•

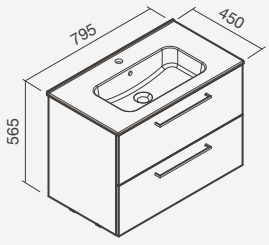

FICUS 60






Wall-mounted vanity unit 60 + Alur 61 washbasin

595 × 450 × 565 mm

> compatible with Alur 61 vitreous china recessed washbasin (included)
> with two drawers
> in the box: vanity unit, washbasin and fixing kit

White	Weight	Pieces per pallet	€
S702 0410 3100 001	22	6	•
Anthracite			
S702 0410 3105 901	22	6	•
Textured gray			
S702 0410 3104 101	22	6	•
Textured walnut			
S702 0410 3103 501	22	6	•

Complements

Support feet

> height: 270mm
> in the box: support feet and fixing kit

N	S702 0730 0012 600	1	-	•

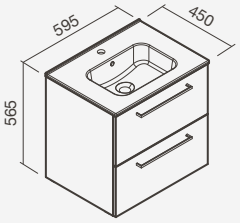

FICUS CABINET





Wall-mounted cabinet

300 × 240 × 1500 mm

> with two doors (reversible)
> with three shelves: one fixed and two adjustable ones
> in the box: cabinet and fixing kit

White	Weight	Pieces per pallet	€
S702 0560 3400 000	18	8	•
Anthracite			
S702 0560 3405 900	18	8	•
Textured gray			
S702 0560 3404 100	18	8	•
Textured walnut			
S702 0560 3403 500	18	8	•

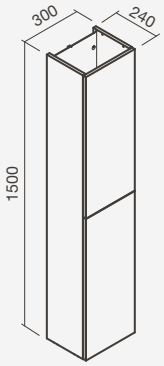



FICUS 60 white wall-mounted vanity unit and cabinet with PRIM washbasin faucet and ANTARES mirror

Maple



MAPLE 60 white wall-mounted vanity unit with doors, LOOP washbasin faucet, UNUK mirror and LOFT toilet

COLOURS

Combinations

White

Textured walnut

DIMENSIONS

895 x 450 x 565 mm
790 x 450 x 565 mm
595 x 450 x 565 mm

MATERIALS

Structure, doors and drawers exterior

16 mm chipboard - lined with white melamine with a smooth and glossy finish, or textured walnut melamine with a textured matte finish

Drawers interior

ABS with textile smooth finish

TECHNOLOGY

Concealed hinges or slides with soft close system (pull to open)

COMPATIBILITY

Vitreous china recessed washbasins, with tap hole and overflow (included)

MAPLE 90





Wall-mounted vanity unit 90 + washbasin 91

895 × 450 × 565 mm

> compatible with vitreous china recessed washbasin 91 (included)
> with two drawers and one door
(top drawer with organizer for small objects)
> in the box: vanity unit, washbasin and fixing kit

White	Weight	Pieces per pallet	€
S702 0600 0000 001	31	6	•
Textured walnut			
S702 0600 0003 501	31	6	•

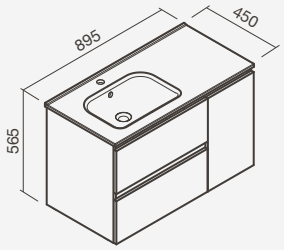

Complements

Support feet

> height: 270mm
> in the box: support feet and fixing kit

N	S702 0730 0012 600	1	-	•



MAPLE 80 textured walnut wall-mounted vanity unit, LOOP washbasin faucet, UNUK mirror and LOFT toilet

MAPLE 80





Wall-mounted vanity unit 80 + Alur 81 washbasin

795 × 450 × 565 mm

> compatible with Alur 81 vitreous china recessed washbasin (included)
> with two drawers (top drawer with organizer for small objects)
> in the box: vanity unit, washbasin and fixing kit

White	Weight	Pieces per pallet	€
S702 0590 3100 001	25	6	•
Textured walnut			
S702 0590 3103 501	25	6	•

Complements

Support feet

> height: 270mm
> in the box: support feet and fixing kit

N	S702 0730 0012 600	1	-	•

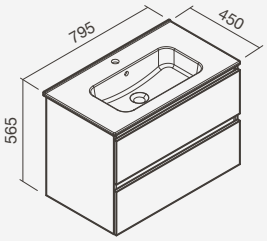

MAPLE 80





Wall-mounted vanity unit 80 + Alur 81 washbasin

795 × 450 × 565 mm

> compatible with Alur 81 vitreous china recessed washbasin (included)
> with two doors
> in the box: vanity unit, washbasin and fixing kit

White	Weight	Pieces per pallet	€
S702 0370 3400 001	22	6	•
Textured walnut			
S702 0370 3403 501	22	6	•

Complements

Support feet

> height: 270mm
> in the box: support feet and fixing kit

N	S702 0730 0012 600	1	-	•

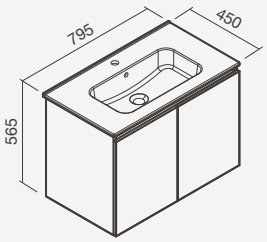

MAPLE 60

Wall-mounted vanity unit 60 + Alur 61 washbasin

595 × 450 × 565 mm

> compatible with Alur 61 vitreous china recessed washbasin (included)
> with two drawers (top drawer with organizer for small objects)
> in the box: vanity unit, washbasin and fixing kit

White	Weight	Pieces per pallet	€
S702 0570 3100 001	22	6	•
Textured walnut			
S702 0570 3103 501	22	6	•





Complements

Support feet

> height: 270mm
> in the box: support feet and fixing kit

N	S702 0730 0012 600	1	-	•

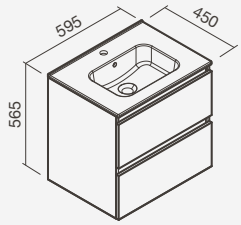

MAPLE 60

Wall-mounted vanity unit 60 + Alur 61 washbasin

595 × 450 × 565 mm

> compatible with Alur 61 vitreous china recessed washbasin (included)
> with two doors
> in the box: vanity unit, washbasin and fixing kit

White	Weight	Pieces per pallet	€
S702 0380 3400 001	19	6	•
Textured walnut			
S702 0380 3403 501	19	6	•





Complements

Support feet

> height: 270mm
> in the box: support feet and fixing kit

N	S702 0730 0012 600	1	-	•

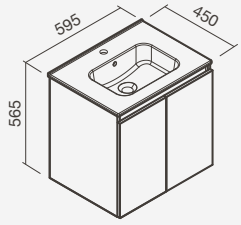

Pike



PIKE 40 textured gray wall-mounted vanity units with SIRIUS mirrors and BALANCE faucets

COLOURS
Combinations

White

Anthracite

Textured gray

Textured walnut

DIMENSIONS
400 x 230 x 580mm

MATERIALS
Structure / door / shelf
16mm chipboard - lined with white or anthracite melamine witha smooth glossy finish or gray or walnut melamine with a textured matte finish

Handles
Anodized aluminum - with a smooth satin finish

TECHNOLOGY
Concealed hinges with soft close system (pull to open)

COMPATIBILITY
Albus 40 countertop / wall-mounted vitreous china washbasins (included)

PIKE 40 + ALBUS 40 WASHBASIN + UNUK MIRROR



Vanity unit 40 + Washbasin 40 + 80 x 40 mirror

400 × 230 × 580mm

> compatible with Albus 40 countertop / wall-mounted washbasin
> one door (reversible)
> in the box: vanity unit, washbasin, Unuk mirror and fixing kit

White	Weight	Pieces per pallet	€
SP02 0180 2100 001	15	6	•
Anthracite			
SP02 0180 2105 901	15	6	•
Textured gray			
SP02 0180 2104 101	15	6	•
Textured walnut			
SP02 0180 2103 501	15	6	•

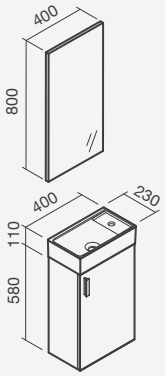

PIKE 40 + ALBUS 40 WASHBASIN



Vanity unit 40 + Washbasin 40

400 × 230 × 580mm

> compatible with Albus 40 countertop / wall-mounted washbasin
> one door (reversible)
> in the box: vanity unit, washbasin and fixing kit

White	Weight	Pieces per pallet	€
SP02 0150 2100 001	4	16	•
Anthracite			
SP02 0150 2105 901	4	16	•
Textured gray			
SP02 0150 2104 101	4	16	•
Textured walnut			
SP02 0150 2103 501	4	16	•

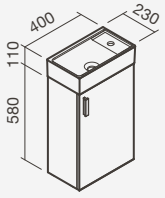

Bathroom mirrors



SCUTUM 800 x 550mm illuminated mirror with OVALO washbasin and PRIM high spout washbasin faucet

SCUTUM

NEW



Illuminated mirror

> LED lighting with a touch sensor on / off (colour temperature: 4000K)
> lighting with intensity control
> demister
> allows vertical fitting
> IP65 protection
> in the box: mirror, transformer (12V) and fixing kit

800 x 550	Weight	Pieces per pallet	€
S702 0621 2600 000	8	20	•

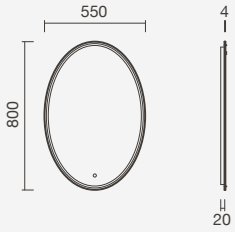

POLARIS







Illuminated mirror

> LED lighting with a *touch* sensor on / off
> bluetooth connection technology and demister with timer (disconnects after 45min)
> possible to pick up calls and control radio stations on mirror (channels and volume)
> allows horizontal fitting
> IP44 protection
> in the box: mirror, transformer and fixing kit

1200 x 700	Weight	Pieces per pallet	€
S702 0312 0200 000	14	15	•
1000 x 700			
S702 0322 0200 000	13	15	•
800 x 700			
S702 0332 0200 000	8	15	•

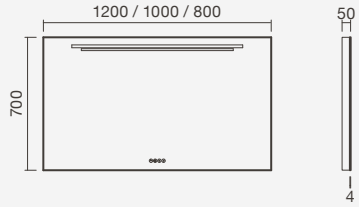

ASTERION

Illuminated mirror

> LED lighting - A+ rating (9,6W/m - colour temperature: 6400K)
> aluminum support frame
> IP44 protection
> in the box: mirror, transformer (20W) and fixing kit

800 x 800	Weight	Pieces per pallet	€
S700 4844 8999 900	11	13	•



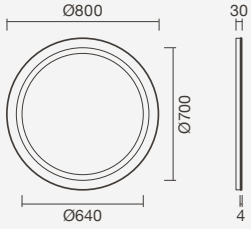

ANTARES







Illuminated mirror

> LED lighting with a *touch* sensor on / off
> magnifying mirror that attaches to mirror through magnets (can be positioned in almost all of the area of the mirror)
> demister that connects and disconnects with the turning on and off the mirror lights
> allows a horizontal or vertical fitting
> IP44 protection
> in the box: mirror, transformer and fixing kit

1200 x 700	Weight	Pieces per pallet	€
S702 0342 6300 000	9	13	•
1000 x 700			
S702 0352 6300 000	8	15	•
800 x 600			
S702 0362 6300 000	7	15	•

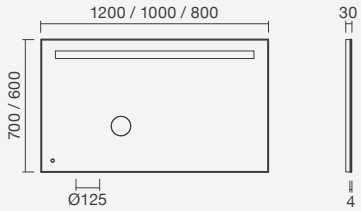

MAYARA







Illuminated mirror

> LED lighting - A+ rating (4,8W/m - colour temperature: 6400K)
> demister
> aluminum support structure
> allows a horizontal or vertical fitting
> IP65 protection
> in the box: mirror, transformer and fixing kit

1200 x 600	Weight	Pieces per pallet	€
S700 5401 2699 900	9	15	•
1000 x 600			
S700 5391 2699 900	8	15	•
800 x 600			
S700 5411 2699 900	7	15	•

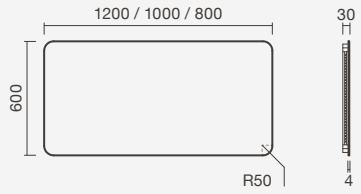

NAOS







Illuminated mirror

> LED lighting - A+ rating (7,2W/m - colour temperature: 6400K)
> light intensity control and demister
> aluminum support structure
> allows a horizontal or vertical fitting
> IP44 protection
> in the box: mirror, transformer (12W) and fixing kit

1200 x 600	Weight	Pieces per pallet	€
S700 5422 0299 900	8	13	•
1000 x 600			
S700 5942 0299 900	7	15	•
800 x 600			
S700 5432 0299 900	6	20	•

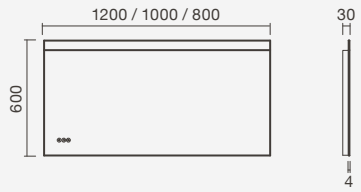



ANTARES 1000 x 700mm illuminated mirror with FICUS 100 textured walnut vanity unit and cabinet and PRIM faucet

SIRIUS







Illuminated mirror

> LED lighting - A+ rating (9,6W/m - colour temperature: 6400K)
> demister
> aluminum frame
> allows a horizontal or vertical fitting
> IP44 protection
> in the box: mirror, transformer (6W) and fixing kit

1200 x 600	Weight	Pieces per pallet	€
S700 5503 4799 900	9	13	•
1000 x 600			
S700 5493 4799 900	8	15	•
800 x 600			
S700 5513 4799 900	7	15	•

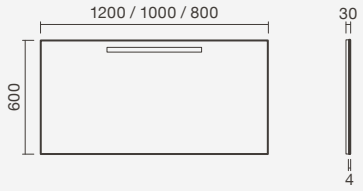

HEKA







Mirror

> aluminum frame
> allows a horizontal or vertical fitting
> in the box: mirror and fixing kit

1200 x 600	Weight	Pieces per pallet	€
S700 5295 1999 900	8	15	•
1000 x 600			
S700 5285 1999 900	7	18	•
800 x 600			
S700 5305 1999 900	6	18	•

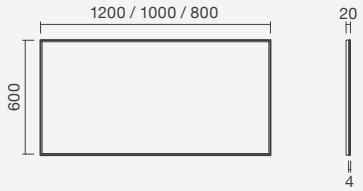

KUMA







Mirror

> allows a horizontal or vertical fitting
> in the box: mirror and fixing kit

1200 x 600	Weight	Pieces per pallet	€
S700 5375 1799 900	8	38	•
1000 x 600			
S700 5365 1799 900	7	38	•
800 x 600			
S700 5385 1799 900	6	38	•

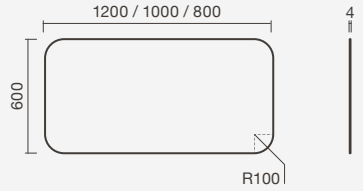

UNUK







Mirror

> allows a horizontal or vertical fitting
> in the box: mirror and fixing kit

1200 x 600	Weight	Pieces per pallet	€
S700 5655 1899 900	8	38	•
1000 x 600			
S700 5645 1899 900	7	58	•
800 x 600			
S700 5675 1899 900	6	58	•

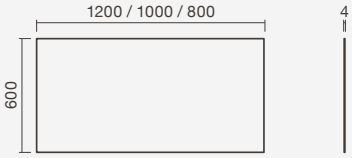

UNUK

Mirror

> allows a horizontal or vertical fitting
> in the box: mirror and fixing kit

800 x 400	Weight	Pieces per pallet	€
S700 5665 1899 900	4	40	•



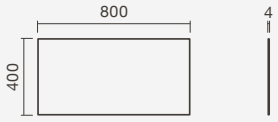

VEGA

Tilting mirror

> allows a vertical fitting
> stainless steel frame (with handle)
> in the box: mirror and fixing kit

600 x 800	Weight	Pieces per pallet	€
S700 5680 8299 900	7	16	•



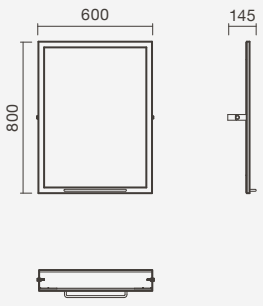

Studio



COLOURS

Chrome

Brushed

Matte Black

MATERIALS

Structure

Stainless steel

INSTALLATION

Screws

WARRANTY

10 Years

STUDIO short hook, soap dispenser and brush holder in a brushed finish with YANKARI wall-mounted vanity unit and HELM solid surface washbasin

HOOKS

Short hook

> wall-mounted application
> in chrome, brushed or matte black plated stainless steel
> in the box: hook and fixing kit



Chrome	Weight	Pieces per pallet	€
S902 0700 0012 600	1	-	•
Brushed			
S902 0700 0001 100	1	-	•
Matte Black			
S902 0700 0071 600	1	-	•



Hook

> wall-mounted application
> in chrome, brushed or matte black plated stainless steel
> in the box: hook and fixing kit



Chrome	Weight	Pieces per pallet	€
S902 0030 0012 600	1	-	•
Brushed			
S902 0030 0001 100	1	-	•
Matte Black			
S902 0030 0071 600	1	-	•

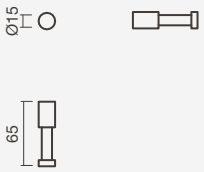

SOAP DISPENSERS

Soap dispenser

> countertop application
> in chrome, brushed or matte black plated stainless steel
> in the box: soap dispenser



Chrome	Weight	Pieces per pallet	€
S902 0740 0012 600	1	-	•
Brushed			
S902 0740 0001 100	1	-	•
Matte Black			
S902 0740 0071 600	1	-	•

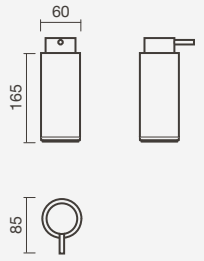

Soap dispenser

> wall-mounted application
> in chrome, brushed or matte black plated stainless steel
> in the box: soap dispenser and fixing kit



Chrome	Weight	Pieces per pallet	€
S902 0040 0012 600	1	-	•
Brushed			
S902 0040 0001 100	1	-	•
Matte Black			
S902 0040 0071 600	1	-	•

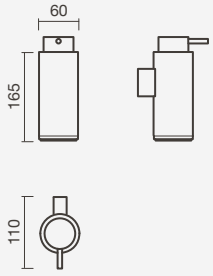

BRUSH HOLDERS



Brush holder

> countertop application
> in chrome, brushed or matte black plated stainless steel
> in the box: brush holder

Chrome	Weight	Pieces per pallet	€
S902 0720 0012 600	1	-	•
Brushed			
S902 0720 0001 100	1	-	•
Matte Black			
S902 0720 0071 600	1	-	•

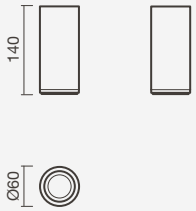



Brush holder

> wall-mounted application
> in chrome, brushed or matte black plated stainless steel
> in the box: brush holder and fixing kit

Chrome	Weight	Pieces per pallet	€
S902 0730 0012 600	1	-	•
Brushed			
S902 0730 0001 100	1	-	•
Matte Black			
S902 0730 0071 600	1	-	•

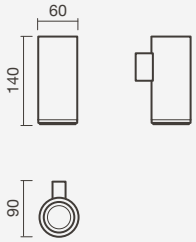

SOAP BASKETS



Soap basket

> wall-mounted application
> in chrome, brushed or matte black plated stainless steel
> in the box: soap basket and fixing kit

Chrome	Weight	Pieces per pallet	€
S902 0050 0012 600	1	-	•
Brushed			
S902 0050 0001 100	1	-	•
Matte Black			
S902 0050 0071 600	1	-	•

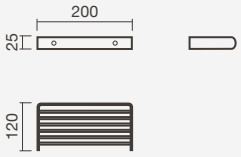



Corner soap basket

> wall-mounted application
> in chrome, brushed or matte black plated stainless steel
> in the box: soap basket and fixing kit

Chrome	Weight	Pieces per pallet	€
S902 0790 0012 600	1	-	•
Brushed			
S902 0790 0001 100	1	-	•
Matte Black			
S902 0790 0071 600	1	-	•

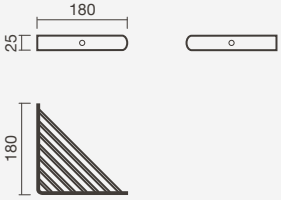



STUDIO towel shelf (rack) in a matte black finish

TOWEL RAILS



Towel shelf (rack)

> wall-mounted application
> in chrome, brushed or matte black plated stainless steel
> in the box: Towel shelf (rack) and fixing kit

Chrome	Weight	Pieces per pallet	€
S902 0710 0012 600	2	-	•
Brushed			
S902 0710 0001 100	2	-	•
Matte Black			
S902 0710 0071 600	2	-	•

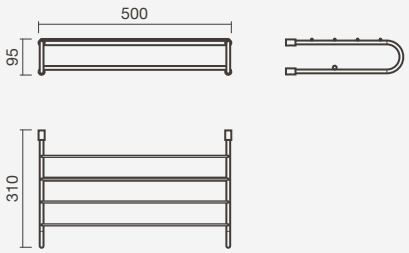



Double towel rail

> wall-mounted application
> in chrome, brushed or matte black plated stainless steel
> in the box: double towel rail and fixing kit

Chrome	Weight	Pieces per pallet	€
S902 0130 0012 600	1	-	•
Brushed			
S902 0130 0001 100	1	-	•
Matte Black			
S902 0130 0071 600	1	-	•

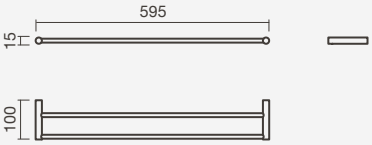



Towel rail 600

> wall-mounted application
> in chrome, brushed or matte black plated stainless steel
> in the box: towel rail and fixing kit

Chrome	Weight	Pieces per pallet	€
S902 0160 0012 600	1	-	•
Brushed			
S902 0160 0001 100	1	-	•
Matte Black			
S902 0110 0071 600	1	-	•

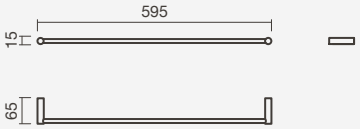



Towel rail 400

> wall-mounted application
> in chrome, brushed or matte black plated stainless steel
> in the box: towel rail and fixing kit

Chrome	Weight	Pieces per pallet	€
S902 0150 0012 600	1	-	•
Brushed			
S902 0150 0001 100	1	-	•
Matte Black			
S902 0120 0071 600	1	-	•

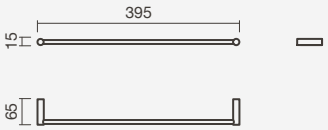



STUDIO double towel rail and corner soap basket in a matte black finish with SWELL shower column

TOWEL RAILS



Swivel towel rail

> wall-mounted application
> in chrome, brushed or matte black plated stainless steel
> in the box: swivel towel rail and fixing kit

Chrome	Weight	Pieces per pallet	€
S902 0140 0012 600	1	-	•
Brushed			
S902 0140 0001 100	1	-	•
Matte Black			
S902 0140 0071 600	1	-	•

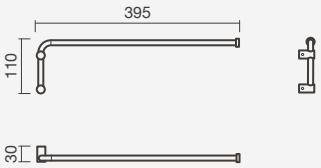



Towel ring

> wall-mounted application
> in chrome, brushed or matte black plated stainless steel
> in the box: towel ring and fixing kit

Chrome	Weight	Pieces per pallet	€
S902 0800 0012 600	1	-	•
Brushed			
S902 0800 0001 100	1	-	•
Matte Black			
S902 0800 0071 600	1	-	•

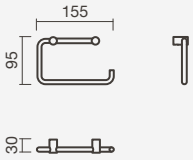

SHELVES



Glass shelf 600

> wall-mounted application
> in glass and chrome, brushed or matte black plated stainless steel
> in the box: glass shelf and fixing kit

Chrome	Weight	Pieces per pallet	€
S902 0760 0012 600	1	-	•
Brushed			
S902 0760 0001 100	1	-	•
Matte Black			
S902 0760 0071 600	1	-	•

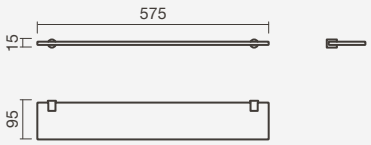



Glass shelf 300

> wall-mounted application
> in glass and chrome, brushed or matte black plated stainless steel
> in the box: glass shelf and fixing kit

Chrome	Weight	Pieces per pallet	€
S902 0750 0012 600	1	-	•
Brushed			
S902 0750 0001 100	1	-	•
Matte Black			
S902 0750 0071 600	1	-	•

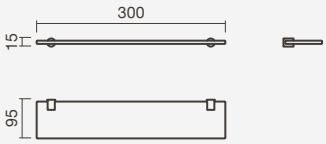



STUDIO swivel towel rail, brush holder, countertop soap dispenser and glass shelf 300 in a chrome finish

SHELVES



Shelf

> wall-mounted application
> in chrome, brushed or matte black plated stainless steel
> in the box: shelf and fixing kit

Chrome	Weight	Pieces per pallet	€
S902 0770 0012 600	1	-	•
Brushed			
S902 0770 0001 100	1	-	•
Matte Black			
S902 0770 0071 600	1	-	•

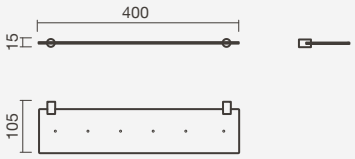



Corner shelf

> wall-mounted application
> in chrome, brushed or matte black plated stainless steel
> in the box: corner shelf and fixing kit

Chrome	Weight	Pieces per pallet	€
S902 0780 0012 600	1	-	•
Brushed			
S902 0780 0001 100	1	-	•
Matte Black			
S902 0780 0071 600	1	-	•

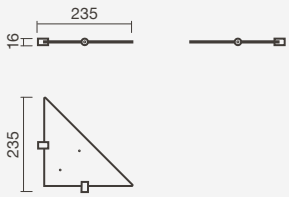



STUDIO shelf in stainless steel with a brushed finish and SWELL shower column

TOILET ROLL HOLDERS

Toilet roll holder with cover

> wall-mounted application
> in chrome, brushed or matte black plated stainless steel
> in the box: toilet roll holder with cover and fixing kit

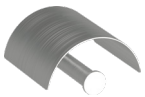

Chrome	Weight	Pieces per pallet	€
S902 0830 0012 600	1	-	•
Brushed			
S902 0830 0001 100	1	-	•
Matte Black			
S902 0830 0071 600	1	-	•

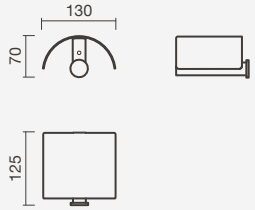

Toilet roll holder with cover (slim)

> wall-mounted application
> in chrome, brushed or matte black plated stainless steel
> in the box: toilet roll holder with cover (slim) and fixing kit



Chrome	Weight	Pieces per pallet	€
S902 0820 0012 600	1	-	•
Brushed			
S902 0820 0001 100	1	-	•
Matte Black			
S902 0820 0071 600	1	-	•

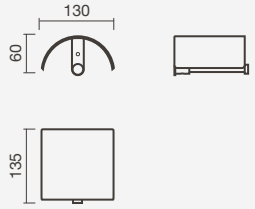

Toilet roll holder

> wall-mounted application
> in chrome, brushed or matte black plated stainless steel
> in the box: toilet roll holder and fixing kit



Chrome	Weight	Pieces per pallet	€
S902 0840 0012 600	1	-	•
Brushed			
S902 0840 0001 100	1	-	•
Matte Black			
S902 0840 0071 600	1	-	•

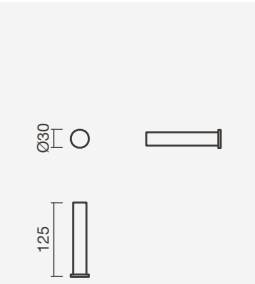

Toilet roll holder (slim)

> wall-mounted application
> in chrome, brushed or matte black plated stainless steel
> in the box: toilet roll holder (slim) and fixing kit



Chrome	Weight	Pieces per pallet	€
S902 0100 0012 600	1	-	•
Brushed			
S902 0100 0001 100	1	-	•
Matte Black			
S902 0100 0071 600	1	-	•

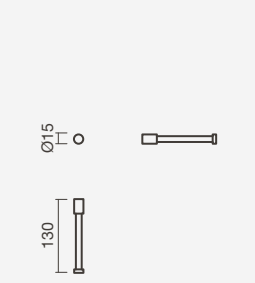

TOILET ROLL HOLDERS



Double toilet roll holder

> wall-mounted application
> in chrome, brushed or matte black plated stainless steel
> in the box: double toilet roll holder and fixing kit

Chrome	Weight	Pieces per pallet	€
S902 0080 0012 600	1	-	•
Brushed			
S902 0080 0001 100	1	-	•
Matte Black			
S902 0080 0071 600	1	-	•

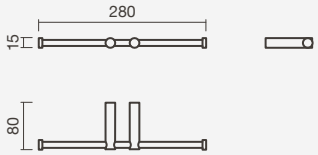



Side toilet roll holder

> wall-mounted application
> in chrome, brushed or matte black plated stainless steel
> in the box: side toilet roll holder and fixing kit

Chrome	Weight	Pieces per pallet	€
S902 0090 0012 600	1	-	•
Brushed			
S902 0090 0001 100	1	-	•
Matte Black			
S902 0090 0071 600	1	-	•

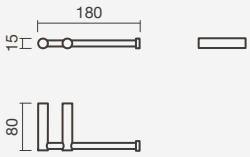



Toilet roll holder / towel rail

> wall-mounted application
> in chrome, brushed or matte black plated stainless steel
> in the box: toilet roll holder / towel rail and fixing kit

Chrome	Weight	Pieces per pallet	€
S902 0810 0012 600	1	-	•
Brushed			
S902 0810 0001 100	1	-	•
Matte Black			
S902 0810 0071 600	1	-	•

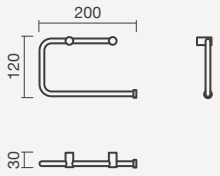

TOILET BRUSHES



Toilet brush

> floor-standing application
> in chrome, brushed or matte black plated stainless steel
> in the box: toilet brush

Chrome	Weight	Pieces per pallet	€
S902 0070 0012 600	1	-	•
Brushed			
S902 0070 0001 100	1	-	•
Matte Black			
S902 0070 0071 600	1	-	•

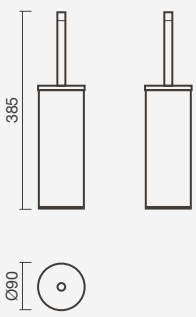

TOILET BRUSHES



Toilet brush

> wall-mounted application
> in chrome, brushed or matte black plated stainless steel
> in the box: toilet brush and fixing kit

Chrome	Weight	Pieces per pallet	€
S902 0060 0012 600	1	-	•
Brushed			
S902 0060 0001 100	1	-	•
Matte Black			
S902 0060 0071 600	1	-	•

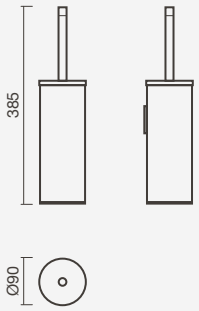



STUDIO double toilet roll holder and wall-mounted toilet brush in a matte black finish with CORAL wall-mounted toilet

Stout



COLOURS

Chrome

MATERIALS

Structure

Stainless steel

INSTALLATION

Screws

Adhesives

WARRANTY

10 Years

STOUT towel shelf (rack) and corner shower soap basket and SWELL shower column and ROCKS shower tray

HOOKS



Hook

> wall-mounted application
> in chrome plated stainless steel
> in the box: hook and fixing kit

Reference	Weight	Pieces per pallet	€
S902 0170 0012 600	1	-	•

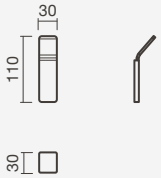



Hook (hoop)

> wall-mounted application
> in chrome plated stainless steel
> in the box: hook and fixing kit

Reference	Weight	Pieces per pallet	€
S902 0870 0012 600	1	-	•

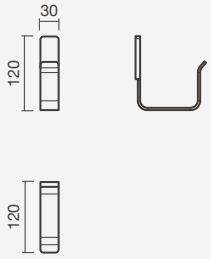

SOAP DISPENSERS



Soap dispenser

> countertop application
> in chrome plated stainless steel
> in the box: soap dispenser

Reference	Weight	Pieces per pallet	€
S902 0180 0012 600	1	-	•

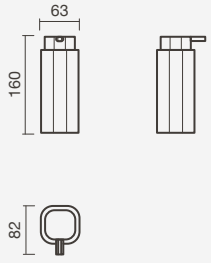

BRUSH HOLDERS

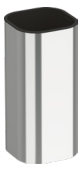

Brush holder

> countertop application
> in chrome plated stainless steel
> in the box: brush holder

Reference	Weight	Pieces per pallet	€
S902 0860 0012 600	1	-	•

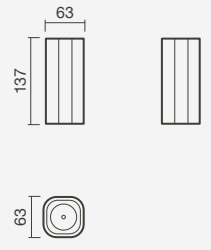

TOWEL RAILS



Towel shelf (rack)

> wall-mounted application
> in chrome plated stainless steel
> in the box: Towel shelf (rack) and fixing kit

Reference	Weight	Pieces per pallet	€
S902 0220 0012 600	2	-	•

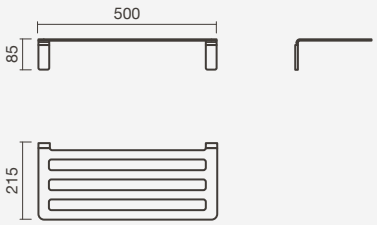



Towel rails

> wall-mounted application
> in chrome plated stainless steel
> in the box: towel rail and fixing kit

600	Weight	Pieces per pallet	€
S902 0210 0012 600	1	-	•
400			
S902 0200 0012 600	1	-	•

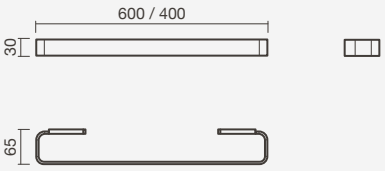

SOAP BASKETS



Shower soap basket

> wall-mounted application
> in chrome plated stainless steel
> in the box: shower soap basket and fixing kit

Reference	Weight	Pieces per pallet	€
S902 0190 0012 600	1	-	•

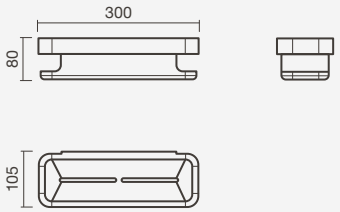



Shower soap basket (corner)

> wall-mounted application
> in chrome plated stainless steel
> in the box: shower soap basket (corner) and fixing kit

Reference	Weight	Pieces per pallet	€
S902 0880 0012 600	1	-	•

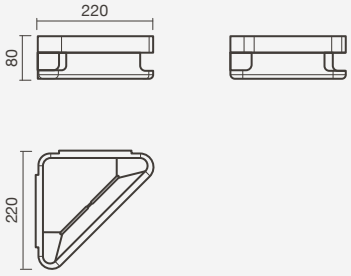

TOILET ROLL HOLDERS

Toilet roll holder with cover

> wall-mounted application
> in chrome plated stainless steel
> in the box: toilet roll holder with cover and fixing kit

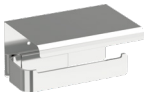

Reference	Weight	Pieces per pallet	€
S902 0900 0012 600	1	-	•

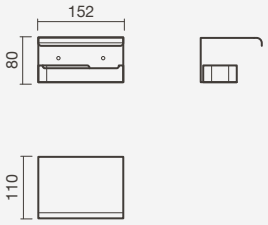

Toilet roll holder

> wall-mounted application
> in chrome plated stainless steel
> in the box: toilet roll holder and fixing kit

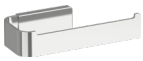

Reference	Weight	Pieces per pallet	€
S902 0230 0012 600	1	-	•

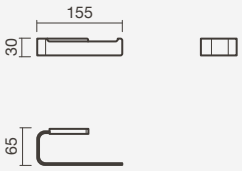

TOILET BRUSHES

Toilet brush

> floor-standing application
> in chrome plated stainless steel
> in the box: toilet brush



Reference	Weight	Pieces per pallet	€
S902 0240 0012 600	1	-	•

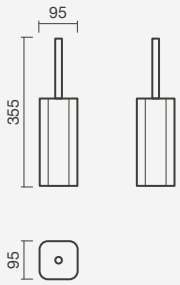

WASTE BINS

Waste bin

> floor-standing application
> in chrome plated or brushed stainless steel
> in the box: waste bin



Chrome	Weight	Pieces per pallet	€
S902 0250 0012 600	2	-	•
Brushed			
S902 0890 0012 600	2	-	•

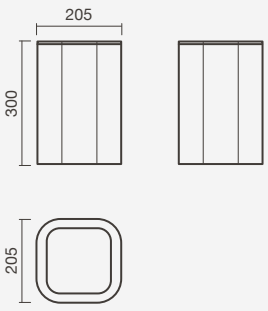

Twig



TWIG brush holder and soap dispenser in a matte white finish

COLOURS

Chrome

Matte White

Matte Black

MATERIALS

Structure

Stainless steel

INSTALLATION

Adhesives

WARRANTY

10 Years

HOOKS

Hook



> wall-mounted application
> in chrome, matte white or matte black plated stainless steel
> in the box: hook and fixing kit

Chrome	Weight	Pieces per pallet	€
S902 0260 0012 600	1	-	•
Matte White			
S902 0260 0006 400	1	-	•
Matte Black			
S902 0260 0071 600	1	-	•

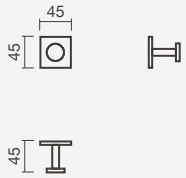

Double hook

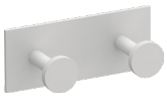

> wall-mounted application
> in chrome, matte white or matte black plated stainless steel
> in the box: double hook and fixing kit

Chrome	Weight	Pieces per pallet	€
S902 0270 0012 600	1	-	•
Matte White			
S902 0270 0006 400	1	-	•
Matte Black			
S902 0270 0071 600	1	-	•

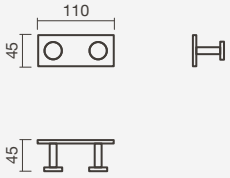

Hanging hook



> wall-mounted application
> in chrome, matte white or matte black plated stainless steel
> in the box: hanging hook and fixing kit

Chrome	Weight	Pieces per pallet	€
S902 0280 0012 600	1	-	•
Matte White			
S902 0280 0006 400	1	-	•
Matte Black			
S902 0280 0071 600	1	-	•

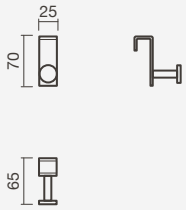

SOAP DISPENSERS

Soap dispenser



> wall-mounted application
> in glass and chrome, matte white or matte black plated stainless steel
> in the box: soap dispenser and fixing kit

Chrome	Weight	Pieces per pallet	€
S902 0290 0012 600	1	-	•
Matte White			
S902 0290 0006 400	1	-	•
Matte Black			
S902 0290 0071 600	1	-	•

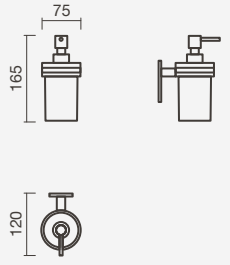

BRUSH HOLDERS



Brush holder

> wall-mounted application
> in glass and chrome, matte white or matte black plated stainless steel
> in the box: brush holder and fixing kit

Chrome	Weight	Pieces per pallet	€
S902 1190 0012 600	1	-	•
Matte White			
S902 1190 0006 400	1	-	•
Matte Black			
S902 1190 0071 600	1	-	•

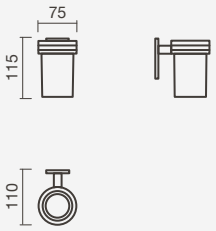

TOWEL RAILS



Towel rail 600

> wall-mounted application
> in chrome, matte white or matte black plated stainless steel
> in the box: towel rail and fixing kit

Chrome	Weight	Pieces per pallet	€
S902 0630 0012 600	1	-	•
Matte White			
S902 0630 0006 400	1	-	•
Matte Black			
S902 0630 0071 600	1	-	•

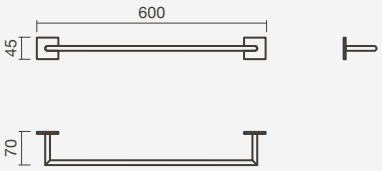



Towel rail 450

> wall-mounted application
> in chrome, matte white or matte black plated stainless steel
> in the box: towel rail and fixing kit

Chrome	Weight	Pieces per pallet	€
S902 0320 0012 600	1	-	•
Matte White			
S902 0320 0006 400	1	-	•
Matte Black			
S902 0320 0071 600	1	-	•

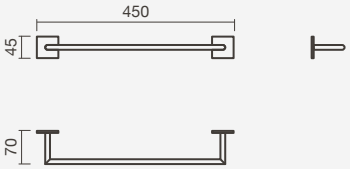



Towel rail 300

> wall-mounted application
> in chrome, matte white or matte black plated stainless steel
> in the box: towel rail and fixing kit

Chrome	Weight	Pieces per pallet	€
S902 0310 0012 600	1	-	•
Matte White			
S902 0310 0006 400	1	-	•
Matte Black			
S902 0310 0071 600	1	-	•

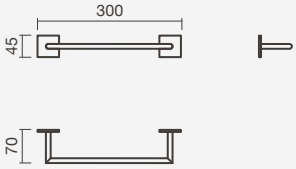

TOWEL RAILS



Towel ring

> wall-mounted application
> in chrome, matte white or matte black plated stainless steel
> in the box: towel rail and fixing kit

Chrome	Weight	Pieces per pallet	€
S902 1200 0012 600	1	-	•
Matte White			
S902 1200 0006 400	1	-	•
Matte Black			
S902 1200 0071 600	1	-	•

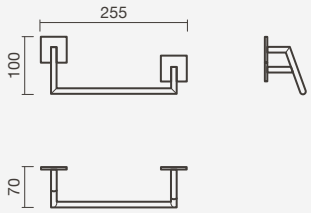



Hanging towel rail 400

> wall-mounted application
> in chrome, matte white or matte black plated stainless steel
> in the box: towel rail and fixing kit

Chrome	Weight	Pieces per pallet	€
S902 0650 0012 600	1	-	•
Matte White			
S902 0650 0006 400	1	-	•
Matte Black			
S902 0650 0071 600	1	-	•

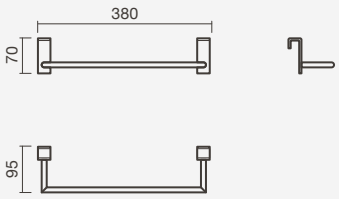



TWIG towel ring in a matte black finish with POP SQUARE wall-mounted bidet and UNIC bidet faucet



Hanging towel rail 300

> wall-mounted application
> in chrome, matte white or matte black plated stainless steel
> in the box: towel rail and fixing kit

Chrome	Weight	Pieces per pallet	€
S902 0640 0012 600	1	-	•
Matte White			
S902 0640 0006 400	1	-	•
Matte Black			
S902 0640 0071 600	1	-	•

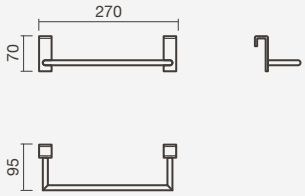

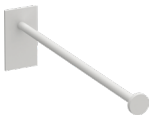

Towel rail

> wall-mounted application
> in chrome, matte white or matte black plated stainless steel
> in the box: towel rail and fixing kit

Chrome	Weight	Pieces per pallet	€
S902 1220 0012 600	1	-	•
Matte White			
S902 1220 0006 400	1	-	•
Matte Black			
S902 1220 0071 600	1	-	•

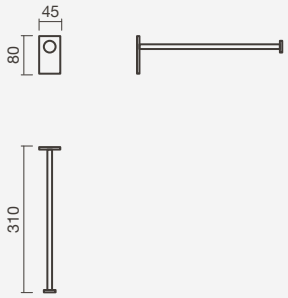

SHOWER SOAP BASKETS

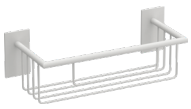

Shower soap basket

> wall-mounted application
> in chrome, matte white or matte black plated stainless steel
> in the box: shower soap basket and fixing kit

Chrome	Weight	Pieces per pallet	€
S902 0300 0012 600	1	-	•
Matte White			
S902 0300 0006 400	1	-	•
Matte Black			
S902 0300 0071 600	1	-	•

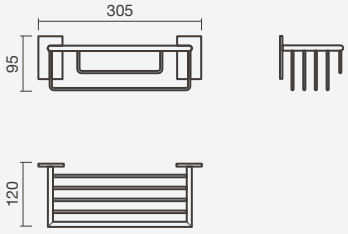

SHELVES



Shelf

> wall-mounted application
> in glass and chrome, matte white or matte black plated stainless steel
> in the box: shelf and fixing kit

Chrome	Weight	Pieces per pallet	€
S902 1210 0012 600	1	-	•
Matte White			
S902 1210 0006 400	1	-	•
Matte Black			
S902 1210 0071 600	1	-	•

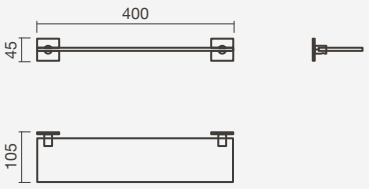

TOILET ROLL HOLDERS



Toilet roll holder with cover

> wall-mounted application
> in chrome, matte white or matte black plated stainless steel
> in the box: toilet roll holder and fixing kit

Chrome	Weight	Pieces per pallet	€
S902 0680 0012 600	1	-	•
Matte White			
S902 0680 0006 400	1	-	•
Matte Black			
S902 0680 0071 600	1	-	•

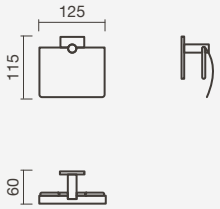



Side toilet roll holder

> wall-mounted application
> in chrome, matte white or matte black plated stainless steel
> in the box: toilet roll holder and fixing kit

Chrome	Weight	Pieces per pallet	€
S902 0660 0012 600	1	-	•
Matte White			
S902 0660 0006 400	1	-	•
Matte Black			
S902 0660 0071 600	1	-	•

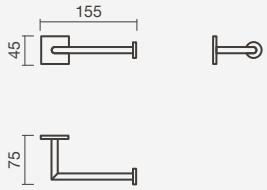



Toilet roll holder

> wall-mounted application
> in chrome, matte white or matte black plated stainless steel
> in the box: toilet roll holder and fixing kit

Chrome	Weight	Pieces per pallet	€
S902 0670 0012 600	1	-	•
Matte White			
S902 0670 0006 400	1	-	•
Matte Black			
S902 0670 0071 600	1	-	•

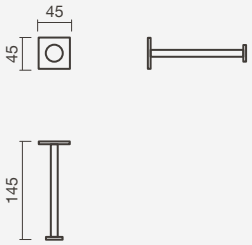

TOILET BRUSHES



Toilet brush

> wall-mounted application
> in chrome, matte white or matte black plated stainless steel
> in the box: toilet brush and fixing kit

Chrome	Weight	Pieces per pallet	€
S902 0690 0012 600	1	-	•
Matte White			
S902 0690 0006 400	1	-	•
Matte Black			
S902 0690 0071 600	1	-	•

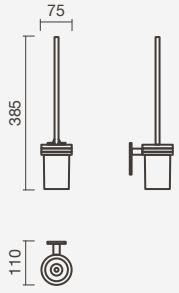

Kin Round



KIN ROUND glass soap dispenser, brush holder, waste bin, corner deep soap basket, toilet brush and toilet roll holder

COLOURS

Chrome

MATERIALS

Structure

Stainless steel

INSTALLATION

Adhesives

WARRANTY

10 Years

HOOKS



Hook

> wall-mounted application
> in chrome plated stainless steel
> in the box: hook and fixing kit

Reference	Weight	Pieces per pallet	€
S902 0440 0012 600	1	-	•



SOAP DISPENSERS



Soap dispenser

> wall-mounted application
> in chrome plated stainless steel
> in the box: soap dispenser and fixing kit

Reference	Weight	Pieces per pallet	€
S902 0470 0012 600	1	-	•

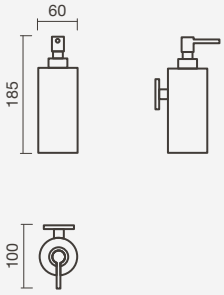



Glass soap dispenser

> wall-mounted application
> in glass and chrome plated stainless steel
> in the box: soap dispenser and fixing kit

Reference	Weight	Pieces per pallet	€
S902 1240 0012 600	1	-	•

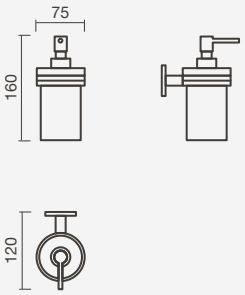

BRUSH HOLDERS



Brush holder

> wall-mounted application
> in glass and chrome plated stainless steel
> in the box: brush holder and fixing kit

Reference	Weight	Pieces per pallet	€
S902 0920 0012 600	1	-	•

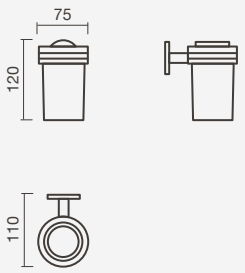

SOAP BASKETS

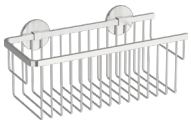

Deep shower soap basket

> wall-mounted application
> in chrome plated stainless steel
> in the box: shower soap basket and fixing kit

Reference	Weight	Pieces per pallet	€
S902 0480 0012 600	1	-	•

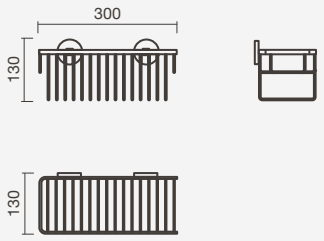



Corner deep shower soap basket

> wall-mounted application
> in chrome plated stainless steel
> in the box: shower soap basket and fixing kit

Reference	Weight	Pieces per pallet	€
S902 1000 0012 600	1	-	•

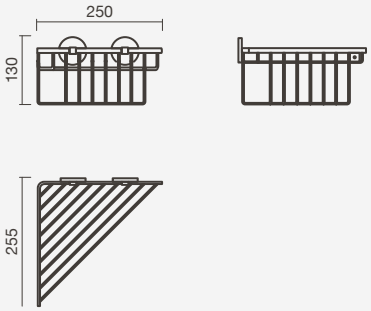



Shower soap baskets

> wall-mounted application
> in chrome plated stainless steel
> in the box: shower soap basket and fixing kit

400mm	Weight	Pieces per pallet	€
S902 0950 0012 600	1	-	•
300mm			
S902 0940 0012 600	1	-	•
200mm			
S902 0380 0012 600	1	-	•

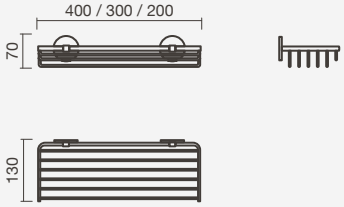

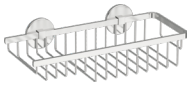

Asymmetric shower soap basket

> wall-mounted application
> in chrome plated stainless steel
> in the box: shower soap basket and fixing kit

Left	Weight	Pieces per pallet	€
S902 0960 0012 600	1	-	•
Right			
S902 0970 0012 600	1	-	•

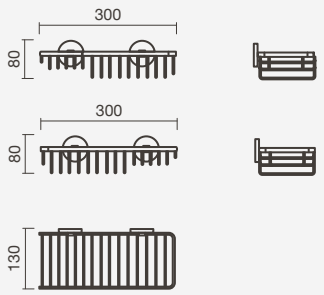

SOAP BASKETS

Corner soap baskets



> wall-mounted application
> in chrome plated stainless steel
> in the box: soap basket and fixing kit

260mm	Weight	Pieces per pallet	€
S902 0990 0012 600	1	-	•
210mm			
S902 0980 0012 600	1	-	•

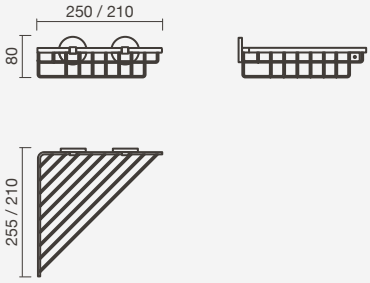

Soap basket



> wall-mounted application
> in chrome plated stainless steel
> in the box: soap basket and fixing kit

Reference	Weight	Pieces per pallet	€
S902 0930 0012 600	1	-	•

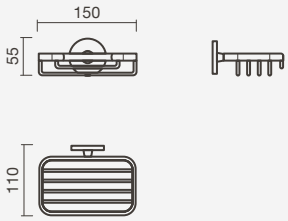

Round soap basket



> wall-mounted application
> in glass and chrome plated stainless steel
> in the box: soap basket and fixing kit

Reference	Weight	Pieces per pallet	€
S902 0910 0012 600	1	-	•

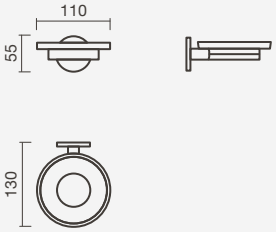

TOWEL RAILS

Towel shelf (rack)



> wall-mounted application
> in chrome plated stainless steel
> in the box: towel shelf (rack) and fixing kit

Reference	Weight	Pieces per pallet	€
S902 0450 0012 600	1	-	•

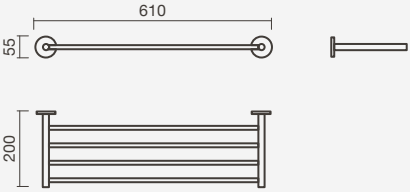

TOWEL RAILS



Towel rails

> wall-mounted application
> in chrome plated stainless steel
> in the box: towel rail and fixing kit

600mm	Weight	Pieces per pallet	€
S902 0390 0012 600	1	-	•
500mm			
S902 0400 0012 600	1	-	•
300mm			
S902 0410 0012 600	1	-	•

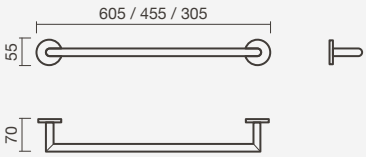



Towel ring

> wall-mounted application
> in chrome plated stainless steel
> in the box: towel ring and fixing kit

Reference	Weight	Pieces per pallet	€
S902 0460 0012 600	1	-	•

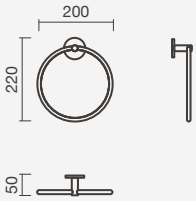

SHELVES



Shelves

> wall-mounted application
> in glass and chrome plated stainless steel
> in the box: shelf and fixing kit

600mm	Weight	Pieces per pallet	€
S902 1020 0012 600	1	-	•
400mm			
S902 1010 0012 600	1	-	•

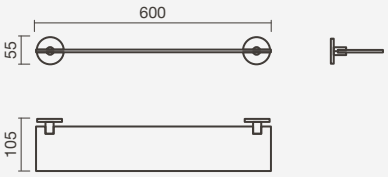

TOILET ROLL HOLDERS



Toilet roll holder with cover

> wall-mounted application
> in chrome plated stainless steel
> in the box: toilet roll holder with cover and fixing kit

Reference	Weight	Pieces per pallet	€
S902 1030 0012 600	1	-	•

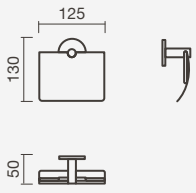

TOILET ROLL HOLDERS



Toilet roll holder

> wall-mounted application
> in chrome plated stainless steel
> in the box: toilet roll holder and fixing kit

Left	Weight	Pieces per pallet	€
S902 0420 0012 600	1	-	•
Right			
S902 0430 0012 600	1	-	•

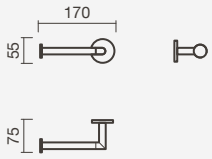

TOILET BRUSHES



Toilet brush

> wall-mounted application
> in chrome plated stainless steel
> in the box: toilet brush and fixing kit

Reference	Weight	Pieces per pallet	€
S902 0370 0012 600	1	-	•

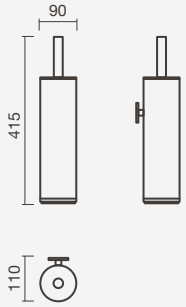



Glass toilet brush

> wall-mounted application
> in glass and chrome plated stainless steel
> in the box: toilet brush and fixing kit

Reference	Weight	Pieces per pallet	€
S902 1040 0012 600	1	-	•

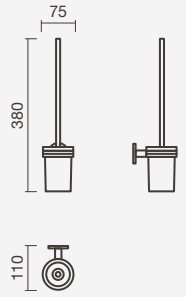

WASTE BINS



Waste bin

> countertop application
> in chrome plated stainless steel
> in the box: waste bin

Reference	Weight	Pieces per pallet	€
S902 0490 0012 600	1	-	•

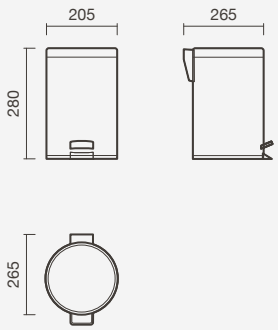

Kin Square



KIN SQUARE corner deep soap basket and towel shelf (rack) with BLOOM shower system, EVOLVE shower enclosure and ESFERA shower tray

COLOURS

Chrome

MATERIALS

Structure

Stainless steel

INSTALLATION

Adhesives

WARRANTY

10 Years

HOOKS



Hook

> wall-mounted application
> in chrome plated stainless steel
> in the box: hook and fixing kit

Reference	Weight	Pieces per pallet	€
S902 0570 0012 600	1	-	•

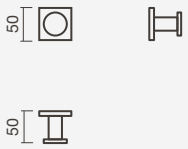

SOAP DISPENSERS



Soap dispenser

> wall-mounted application
> in chrome plated stainless steel
> in the box: soap dispenser and fixing kit

Reference	Weight	Pieces per pallet	€
S902 0600 0012 600	1	-	•

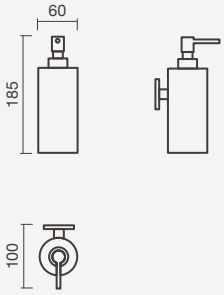

Glass soap dispenser

> wall-mounted application
> in glass and chrome plated stainless steel
> in the box: soap dispenser and fixing kit

Reference	Weight	Pieces per pallet	€
S902 1250 0012 600	1	-	•

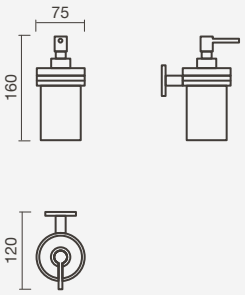

BRUSH HOLDERS



Brush holder

> wall-mounted application
> in glass and chrome plated stainless steel
> in the box: brush holder and fixing kit

Reference	Weight	Pieces per pallet	€
S902 1060 0012 600	1	-	•

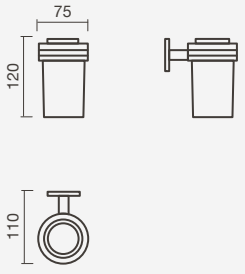

SOAP BASKETS

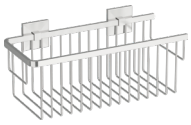

Deep soap basket

> wall-mounted application
> in chrome plated stainless steel
> in the box: soap basket and fixing kit

Reference	Weight	Pieces per pallet	€
S902 0610 0012 600	1	-	•

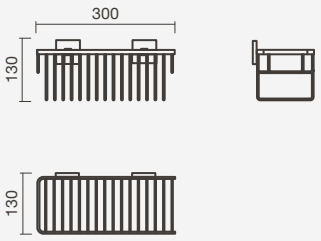



Corner deep soap basket

> wall-mounted application
> in chrome plated stainless steel
> in the box: soap basket and fixing kit

Reference	Weight	Pieces per pallet	€
S902 1140 0012 600	1	-	•

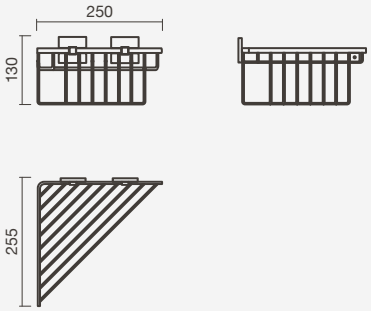

Soap baskets

> wall-mounted application
> in chrome plated stainless steel
> in the box: soap basket and fixing kit

400mm	Weight	Pieces per pallet	€
S902 1090 0012 600	1	-	•
300mm			
S902 1080 0012 600	1	-	•
200mm			
S902 0510 0012 600	1	-	•



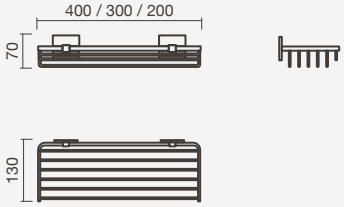

Asymmetric shower basket

> wall-mounted application
> in chrome plated stainless steel
> in the box: soap basket and fixing kit

Left	Weight	Pieces per pallet	€
S902 1100 0012 600	1	-	•
Right			
S902 1110 0012 600	1	-	•

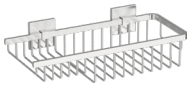

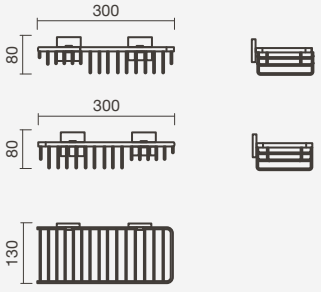

SOAP BASKETS



Corner soap basket

> wall-mounted application
> in chrome plated stainless steel
> in the box: soap basket and fixing kit

260mm	Weight	Pieces per pallet	€
S902 1130 0012 600	1	-	•
210mm			
S902 1120 0012 600	1	-	•

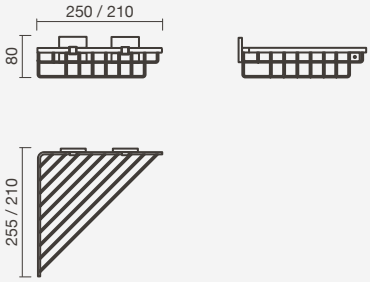

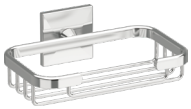

Soap basket

> wall-mounted application
> in chrome plated stainless steel
> in the box: soap basket and fixing kit

Reference	Weight	Pieces per pallet	€
S902 1070 0012 600	1	-	•

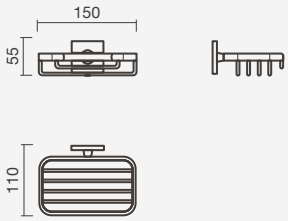

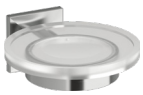

Round soap basket

> wall-mounted application
> in glass and chrome plated stainless steel
> in the box: soap basket and fixing kit

Reference	Weight	Pieces per pallet	€
S902 1050 0012 600	1	-	•

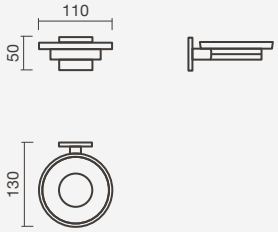

TOWEL RAILS



Towel shelf (rack)

> wall-mounted application
> in chrome plated stainless steel
> in the box: towel shelf (rack) and fixing kit

Reference	Weight	Pieces per pallet	€
S902 0580 0012 600	1	-	•

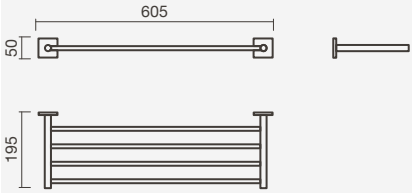

TOWEL RAILS



Towel rails

> wall-mounted application
> in chrome plated stainless steel
> in the box: towel rail and fixing kit

600mm	Weight	Pieces per pallet	€
S902 0520 0012 600	1	-	•
500mm			
S902 0530 0012 600	1	-	•
300mm			
S902 0540 0012 600	1	-	•

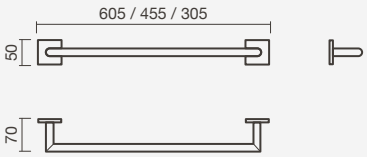



Towel ring

> wall-mounted application
> in chrome plated stainless steel
> in the box: towel rail and fixing kit

Reference	Weight	Pieces per pallet	€
S902 0590 0012 600	1	-	•

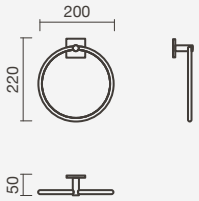

SHELVES



Shelves

> wall-mounted application
> in glass and chrome plated stainless steel
> in the box: shelf and fixing kit

600mm	Weight	Pieces per pallet	€
S902 1160 0012 600	1	-	•
400mm			
S902 1150 0012 600	1	-	•

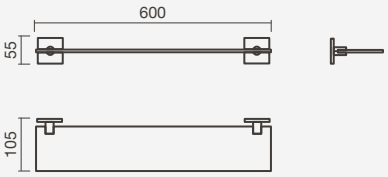

TOILET ROLL HOLDERS



Toilet roll holder with cover

> wall-mounted application
> in chrome plated stainless steel
> in the box: toilet roll holder and fixing kit

Reference	Weight	Pieces per pallet	€
S902 1170 0012 600	1	-	•

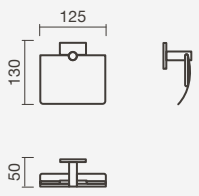

TOILET ROLL HOLDERS

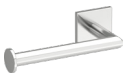

Toilet roll holder

> wall-mounted application
> in chrome plated stainless steel
> in the box: toilet roll holder and fixing kit

Left	Weight	Pieces per pallet	€
S902 0550 0012 600	1	-	•
Right			
S902 0560 0012 600	1	-	•

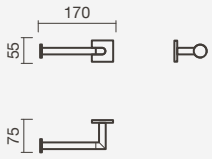

TOILET BRUSHES



Toilet brush

> wall-mounted application
> in chrome plated stainless steel
> in the box: toilet brush and fixing kit

Reference	Weight	Pieces per pallet	€
S902 0500 0012 600	1	-	•

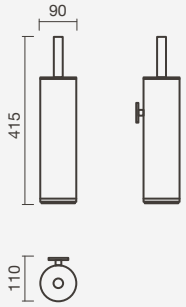



Glass toilet brush

> wall-mounted application
> in glass and chrome plated stainless steel
> in the box: toilet brush and fixing kit

Reference	Weight	Pieces per pallet	€
S902 1180 0012 600	1	-	•

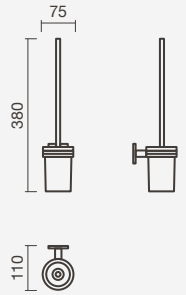

WASTE BINS



Waste bin

> countertop application
> in chrome plated stainless steel
> in the box: waste bin

Reference	Weight	Pieces per pallet	€
S902 0620 0012 600	1	-	•

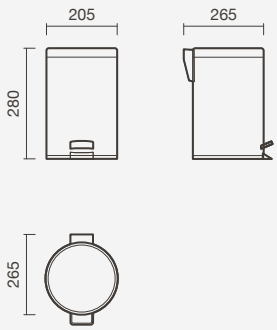

Mobil



COLOURS

Brushed steel

MATERIALS

Structure

Stainless steel (AISI 304)

Folding curved support bars - with and without toilet roll holder - with MOBIL floor-standing close-coupled toilet and bidet shower

SUPPORT BARS

Washbasin support bar - fixed



> wall-mounted application
> in stainless steel (AISI 304) with a brushed finish
> 5 year warranty
> in the box: support bar and fixing kit

Left	Weight	Pieces per pallet	€
S900 1803 9801 100	2	36	•
Right			
S900 1803 9701 100	2	36	•

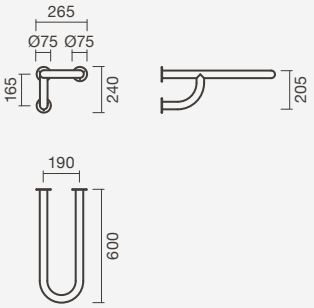



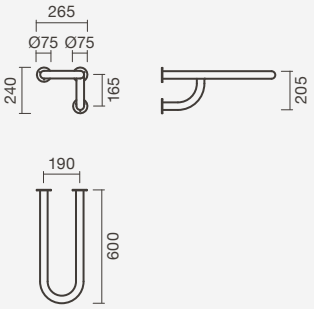

135° Angled support bar - fixed



> wall-mounted application
> in stainless steel (AISI 304) with a brushed finish
> 5 year warranty
> in the box: support bar and fixing kit

Reference	Weight	Pieces per pallet	€
S900 1772 7201 100	2	48	•

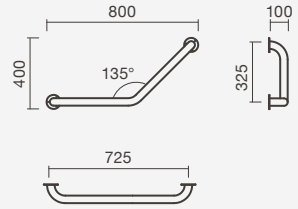

90° Angled support bar - fixed



> wall-mounted application
> in stainless steel (AISI 304) with a brushed finish
> 5 year warranty
> in the box: support bar and fixing kit

Reference	Weight	Pieces per pallet	€
S900 1762 7201 100	2	54	•

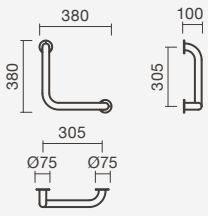

SUPPORT BARS



90° Angled support bar - fixed

> wall-mounted application
> in stainless steel (AISI 304) with a brushed finish
> 5 year warranty
> in the box: support bar and fixing kit

Left	Weight	Pieces per pallet	€
S900 1782 7301 100	1	36	•
Right			
S900 1782 7101 100	1	36	•

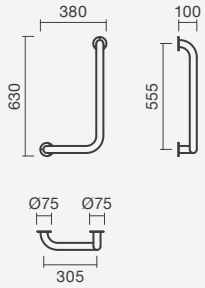



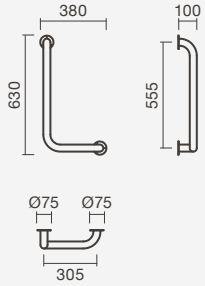

Curved toilet support bar - folding

> wall-mounted application
> in stainless steel (AISI 304) with a brushed finish
> 5 year warranty
> in the box: support bar and fixing kit

Left	Weight	Pieces per pallet	€
S900 1844 0201 100	3	36	•
Right			
S900 1843 9901 100	3	36	•



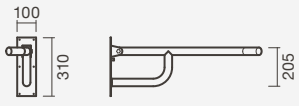

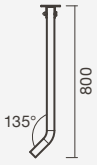



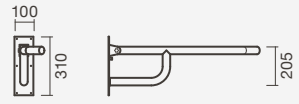

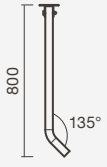

SUPPORT BARS

Toilet support bar - folding

> wall-mounted application
> in stainless steel (AISI 304) with a brushed finish
> 5 year warranty
> in the box: support bar and fixing kit

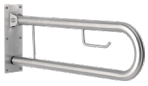

With toilet roll holder	Weight	Pieces per pallet	€
S900 1854 0101 100	3	36	•
Without toilet roll holder			
S900 1854 0001 100	3	36	•

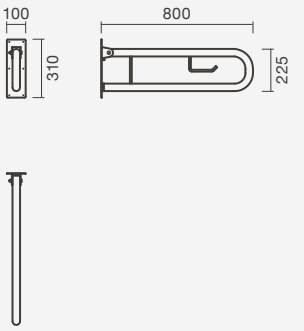

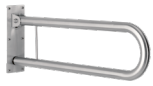

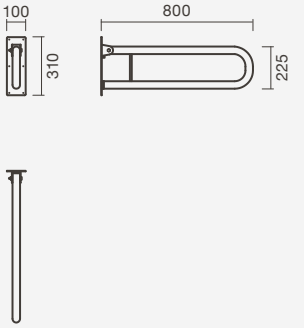

Toilet support bar - fixed

> wall-mounted application
> in stainless steel (AISI 304) with a brushed finish
> 5 year warranty
> in the box: support bar and fixing kit



Left	Weight	Pieces per pallet	€
S900 1834 0201 100	3	24	•
Right			
S900 1833 9901 100	3	24	•

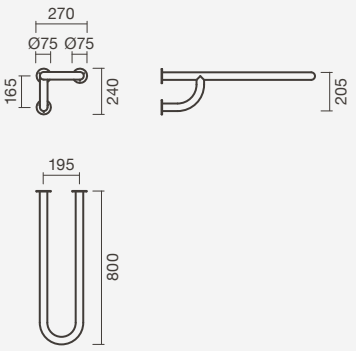



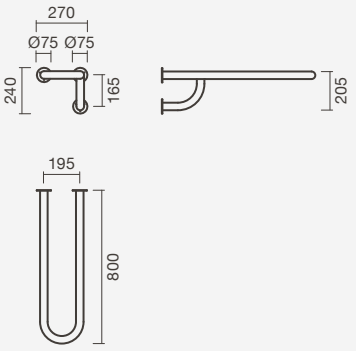

SUPPORT BARS

Toilet support bar - fixed

> wall and floor-mounted application
> in stainless steel (AISI 304) with a brushed finish
> 5 year warranty
> in the box: support bar and fixing kit



Left	Weight	Pieces per pallet	€
S900 1824 0201 100	3	9	•
Right			
S900 1823 9901 100	3	9	•

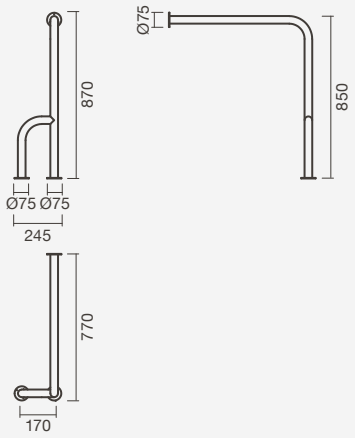



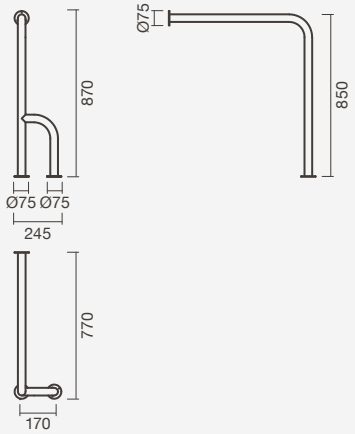

Support bar - fixed

> wall-mounted application
> in stainless steel (AISI 304) with a brushed finish
> 5 year warranty
> in the box: support bar and fixing kit



635	Weight	Pieces per pallet	€
S900 1817 7001 100	2	-	•
375			
S900 1817 6801 100	2	-	•



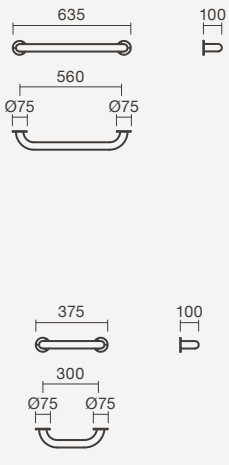

WASHBASIN SUPPORT SYSTEMS





Hydraulic washbasin support system - tilting

> wall-mounted application
> in steel with white lacquered finish or
in stainless steel (AISI 304) with a brushed finish
> compatible with Mobil 64 washbasin
> 5 year warranty
> in the box: washbasin support system and fixing kit

Steel - white	Weight	Pieces per pallet	€
S101 0553 9600 000	10	-	•
Stainless steel - Brushed			
S101 0563 9601 100	12	-	•

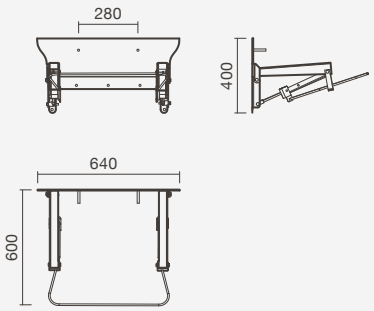



Washbasin support system - pre-adjustable

> wall-mounted application
> in stainless steel (AISI 304) with a brushed finish
> compatible with Mobil 64 washbasin
> 5 year warranty
> in the box: washbasin support system and fixing kit

Reference	Weight	Pieces per pallet	€
S101 0573 9601 100	8	-	•

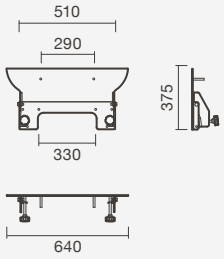





Folding shower seat

> wall-mounted application
> in stainless steel (AISI 304) with a brushed finish
> in the box: folding shower seat and fixing kit

Reference	Weight	Pieces per pallet	€
S900 1792 7401 100	5	18	•

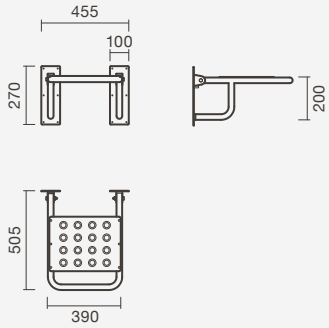



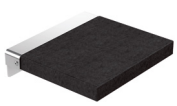

Folding shower seat

> wall-mounted application
> in stainless steel and polyurethane
> in the box: folding shower seat and fixing kit

White	Weight	Pieces per pallet	€
S900 1862 7500 000	5	36	•
Black			
S900 1862 7505 600	5	36	•

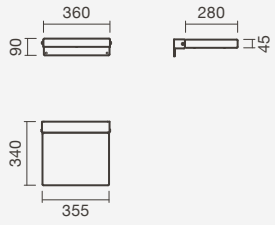





Shower trays

Introduction

Information 412
Collection guide 414

Stonex® shower trays

N Rocks 418

Acrylic shower trays

N Vita 422
Julia 430
Esfera 434

Ceramic shower trays

N Calisson 436

Enamelled steel trays

Universal 440

Shower Trays

All you need to know



Range

Variety

Design without limitations

People often think that when it comes to selecting a new shower area, their options are more limited than when picking a bathtub. But reality could not be more different. Learn more about our large selection of materials, shapes and sizes with custom solutions to suit every need.

Typologies

Applications

Get a better understanding of each typology

Choosing the right shower tray can be confusing, especially when that decision has to fit in with the other features of in the bathroom. Learn more about the different application typologies and their implications here.

Freestanding

The freestanding shower trays come with a 30 to 150mm profile and can be installed in low depth floors. Its lower profile allows for a more comfortable and safe experience when getting in and out of the shower area.

Available in these collections:
Rocks · Vita · Julia
Esfera · Calisson

Recessed

Recessed shower tray's vats are deeper than its profile. They range from 50 to 150mm deep and can only be installed on floors with enough depth (including the shower waste) or raised above the floor.

Available in these collections:
Vita · Julia · Universal

Range

Materials

Learn more about the different types

Get to know our wide range of materials and pick the best solution for each bathroom.

Stonex®

Stonex® is a composite material that combines mineral fillers with polyester resin. The surface is coated with gel coat, which gives it a distinctly soft and comfortable texture, very similar to natural stone. This textured finish grants an enhanced anti-slip quality that ensures comfort and safety for the user. This material is extremely durable and resistant to wear, impact, thermal shock and UV rays. It is available in three different colours, in which the mineral pigment is integrated in the composition of the raw material, remaining unaltered throughout time.

Available in these collections:
Rocks

Acrylic

Acrylic shower trays are one of the most popular choices. These are built by thermoforming an acrylic sheet and reinforcing the shower tray with a wooden plank (sealed with fibre glass and polyester resin), which assures itsgreat resistance to impact. The attributes of acrylic also give them a uniform colour and a lasting sheen, which combined with its warm and soft touch of its surface provides maximum experience of well-being. Available in a great variety of shapes and sizes, these are one of the lighter, more affordable solutions.

Available in these collections:
Vita · Julia · Esfera

Ceramic

If you are a looking for an affordable, easy to clean and resistant to chemical agression shower tray, the ceramic ones are a good choice. Made from natural raw materials – such as clay, kaolin, feldspar and quartz – these shower trays are known for their waterproof exterior, that is extremely resistant to stains - requiring a very simple maintenance. Its glazed surface is – as all Sanitana ceramic shower trays – equipped with a pattern of anti-slip high relief embossed in its design.

Available in these collections:
Calisson

Enamelled steel

The enamelled steel shower trays are extremely functional, particularly thin, but nonetheless very durable. These are made of a combination of steel – which grants them structural strength – and glass – which grants them their non-porous, hygienic and UV rays resistant surface. Their surface – which is harder than marble, plastic or steel – will very unlikely be damaged by common bathroom products and chemicals, as long as the directions for use are followed. This quality translates in 30 years of warranty – granted for Axis and Slim shower trays.

Available in these collections:
Universal

Prevention

Safety and comfort

Learn about the safest options

The shower is a potentially dangerous area when it comes to slips and falls, even when the user does not have any mobility impairments. Learn how to make this area safer by choosing one of our shower trays.

Anti-slip surface

Shower trays with an anti-slip surface ensure safety for all its users, either with textured coating or by including an anti-slip embossed pattern in its design.

Available in these collections:
Rocks · Vita · Julia · Esfera
Calisson · Universal

Extra flat

Extra flat shower trays can be installed at floor level to ensure a safer process of getting in and out of the shower, even when the user has conditioned or limited mobility.

Available in these collections:
Rocks · Vita

Collection guide

Discover our rectangular shower trays

LENGTH	 **Rocks** Stonex® Page 418	 **Vita** Acrylic Page 422	 **Julia** Acrylic Page 430
2000	2000 x 900 2000 x 800		
1900	1900 x 900 1900 x 800		
1800	1800 x 900 1800 x 800	1800 x 800	
1700	1700 x 900 1700 x 800	1700 x 800 1700 x 700	
1600	1600 x 900 1600 x 800 1600 x 700	1600 x 900 1600 x 800 1600 x 700	1600 x 800
1500	1500 x 900 1500 x 800 1500 x 700	1500 x 800	
1400	1400 x 900 1400 x 800 1400 x 700	1400 x 900 1400 x 800 1400 x 700	1400 x 800
1300	1300 x 900 1300 x 800 1300 x 700	1300 x 800	
1200	1200 x 900 1200 x 800 1200 x 700	1200 x 900 1200 x 800 1200 x 700	1200 x 800
1100	1100 x 900 1100 x 800 1100 x 700	1100 x 800	
1000	1000 x 900 1000 x 800 1000 x 700	1000 x 900 1000 x 800 1000 x 700	1000 x 800
900	900 x 800 900 x 700		900 x 750



Esfera
Acrylic

Page 434



Calisson
Ceramic

Page 436

LENGTH	Esfera	Calisson
2000		
1900		
1800		
1700	1700 x 700	
1600	1700 x 700	
1500	1700 x 700	
1400	1400 x 700	1400 x 700
1300	1300 x 700	
1200	1300 x 700	1200 x 800 1200 x 700
1100	1100 x 700	
1000	1100 x 700	1000 x 800 1000 x 700
900		900 x 720

Collection guide

Discover our square and quadrant shower trays

LENGTH	 **Rocks** Stonex® Page 418	 **Vita** Acrylic Page 422	 **Julia** Acrylic Page 430	 **Esfera** Acrylic Page 434
1800				
1700				
1600				
1500				
1400				
1300				
1200				
1100				
1000		1000 x 1000		1000 x 1000 *(only in square format)*
900	900 x 900	900 x 900	900 x 900	900 x 900
800		800 x 800	800 x 800	800 x 800
700			700 x 700	

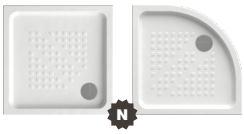

Calisson
Ceramic

Page 436



Universal
Enamelled steel

Page 440

LENGTH

1800		
1700		
1600		
1500		
1400		
1300		
1200		
1100		
1000		
900	900 x 900	900 x 900 *(only in square format)*
800	800 x 800	800 x 800 *(only in square format)*
700	700 x 700 *(only in square format)*	700 x 700

Rocks



ROCKS 1900 x 800mm freestanding rectangular shower tray in white

COLOURS

White (00)

Anthracite (59)

Black (56)

SURFACE

Anti-slip
Extra flat

FORMATS

Rectangular
Square

INSTALLATION

Freestanding

MATERIAL

Stonex®

SHOWER WASTE

Ø90mm shower waste with stainless steel drainage grate - AISI 304 (included)

IN THE BOX

Shower tray,
shower waste
and drainage grate

RECTANGULAR

Freestanding shower trays - Width 900

> freestanding application
> anti-slip surface
> 30mm profile
> in the box: shower tray, shower waste and drainage grate

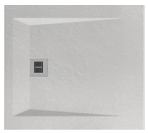
White (00)

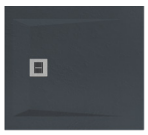
Anthracite (59)


Black (56)

Measurements	Reference	Weight	€
2000 x 900 x 30	SP30 17D0 3841 00..0	100	•
1900 x 900 x 30	SP30 176C 3841 00..0	95	•
1800 x 900 x 30	SP30 1708 3841 00..0	91	•
1700 x 900 x 30	SP30 16A4 3841 00..0	85	•
1600 x 900 x 30	SP30 1640 3841 00..0	80	•
1500 x 900 x 30	SP30 15DC 3841 00..0	75	•
1400 x 900 x 30	SP30 1578 3841 00..0	70	•
1300 x 900 x 30	SP30 1514 3841 00..0	65	•
1200 x 900 x 30	SP30 14B0 3841 00..0	60	•
1100 x 900 x 30	SP30 144C 3841 00..0	55	•
1000 x 900 x 30	SP30 13E8 3841 00..0	51	•

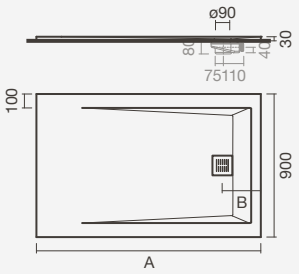

	A	B
2000 x 900 x 30	2000	425
1900 x 900 x 30	1900	425
1800 x 900 x 30	1800	425
1700 x 900 x 30	1700	425
1600 x 900 x 30	1600	365
1500 x 900 x 30	1500	365
1400 x 900 x 30	1400	245
1300 x 900 x 30	1300	245
1200 x 900 x 30	1200	245
1100 x 900 x 30	1100	245
1000 x 900 x 30	1000	245

On the product reference please input the chosen colour code in the ".." space

Freestanding shower trays - Width 800

> freestanding application
> anti-slip surface
> 30mm profile
> in the box: shower tray, shower waste and drainage grate

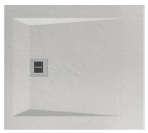
White (00)

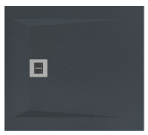
Anthracite (59)


Black (56)

Measurements	Reference	Weight	€
2000 x 800 x 30	SP30 17D0 3201 00..0	85	•
1900 x 800 x 30	SP30 176C 3201 00..0	80	•
1800 x 800 x 30	SP30 1708 3201 00..0	76	•
1700 x 800 x 30	SP30 16A4 3201 00..0	74	•
1600 x 800 x 30	SP30 1640 3201 00..0	70	•
1500 x 800 x 30	SP30 15DC 3201 00..0	65	•
1400 x 800 x 30	SP30 1578 3201 00..0	60	•
1300 x 800 x 30	SP30 1514 3201 00..0	55	•
1200 x 800 x 30	SP30 14B0 3201 00..0	50	•
1100 x 800 x 30	SP30 144C 3201 00..0	45	•
1000 x 800 x 30	SP30 13E8 3201 00..0	41	•
900 x 800 x 30	SP30 1384 3201 00..0	36	•

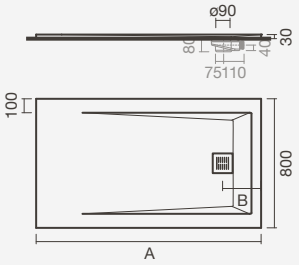

	A	B
2000 x 800 x 30	2000	425
1900 x 800 x 30	1900	425
1800 x 800 x 30	1800	425
1700 x 800 x 30	1700	425
1600 x 800 x 30	1600	365
1500 x 800 x 30	1500	365
1400 x 800 x 30	1400	245
1300 x 800 x 30	1300	245
1200 x 800 x 30	1200	245
1100 x 800 x 30	1100	245
1000 x 800 x 30	1000	245
900 x 800 x 30	900	245

On the product reference please input the chosen colour code in the ".." space

RECTANGULAR

Freestanding shower trays - Width 700

> freestanding application
> anti-slip surface
> 30mm profile
> in the box: shower tray, shower waste and drainage grate

Measurements	Reference	Weight	€
1600 x 700 x 30	SP30 1640 2BC1 00..0	65	•
1500 x 700 x 30	SP30 15DC 2BC1 00..0	58	•
1400 x 700 x 30	SP30 1578 2BC1 00..0	55	•
1300 x 700 x 30	SP30 1514 2BC1 00..0	48	•
1200 x 700 x 30	SP30 14B0 2BC1 00..0	43	•
1100 x 700 x 30	SP30 144C 2BC1 00..0	38	•
1000 x 700 x 30	SP30 13E8 2BC1 00..0	34	•
900 x 700 x 30	SP30 1384 2BC1 00..0	32	•

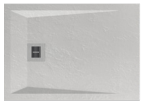
White (00)


Anthracite (59)


Black (56)

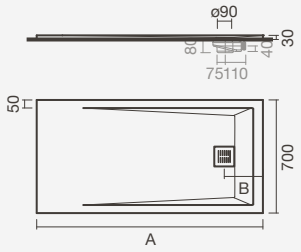

	A	B
1600 x 700 x 30	1600	365
1500 x 700 x 30	1500	365
1400 x 700 x 30	1400	245
1300 x 700 x 30	1300	245
1200 x 700 x 30	1200	245
1100 x 700 x 30	1100	245
1000 x 700 x 30	1000	245
900 x 700 x 30	900	245

On the product reference please input the chosen colour code in the "..." space

SQUARE

Freestanding shower tray

> freestanding application
> anti-slip surface
> 30mm profile
> in the box: shower tray, shower waste and drainage grate

Measurements	Reference	Weight	€
900 x 900 x 30	SP30 1384 3841 00..0	42	•
800 x 800 x 30	S202 0680 000. .01	35	•

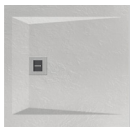
White (00)


Anthracite (59)


Black (56)

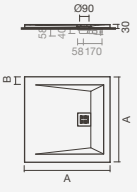

	A	B
900 x 900	900	125
800 x 800	800	75

On the product reference please input the chosen colour code in the "..." space

SHOWER WASTES

Ø90 Anti-siphon shower waste

> body in plastic and rubber, drainage grate in stainless steel (AISI 304)
> in the box: shower waste

Reference	Weight	€
S900 9910 0099 900	1	•

DRAINAGE GRATES

Shower waste drainage grate

> in stainless steel (AISI 304)
> in the box: drainage grate

Reference	Weight	€
TN10 0052 0000 0000	1	•



REPAIR KITS

ROCKS shower trays repair kit

> in the box: repair kit







White	Weight	€
S200 8527 6300 000	1	•
Anthracite		
S200 8547 6305 900	1	•
Black		
S200 8537 6305 600	1	•

Vita

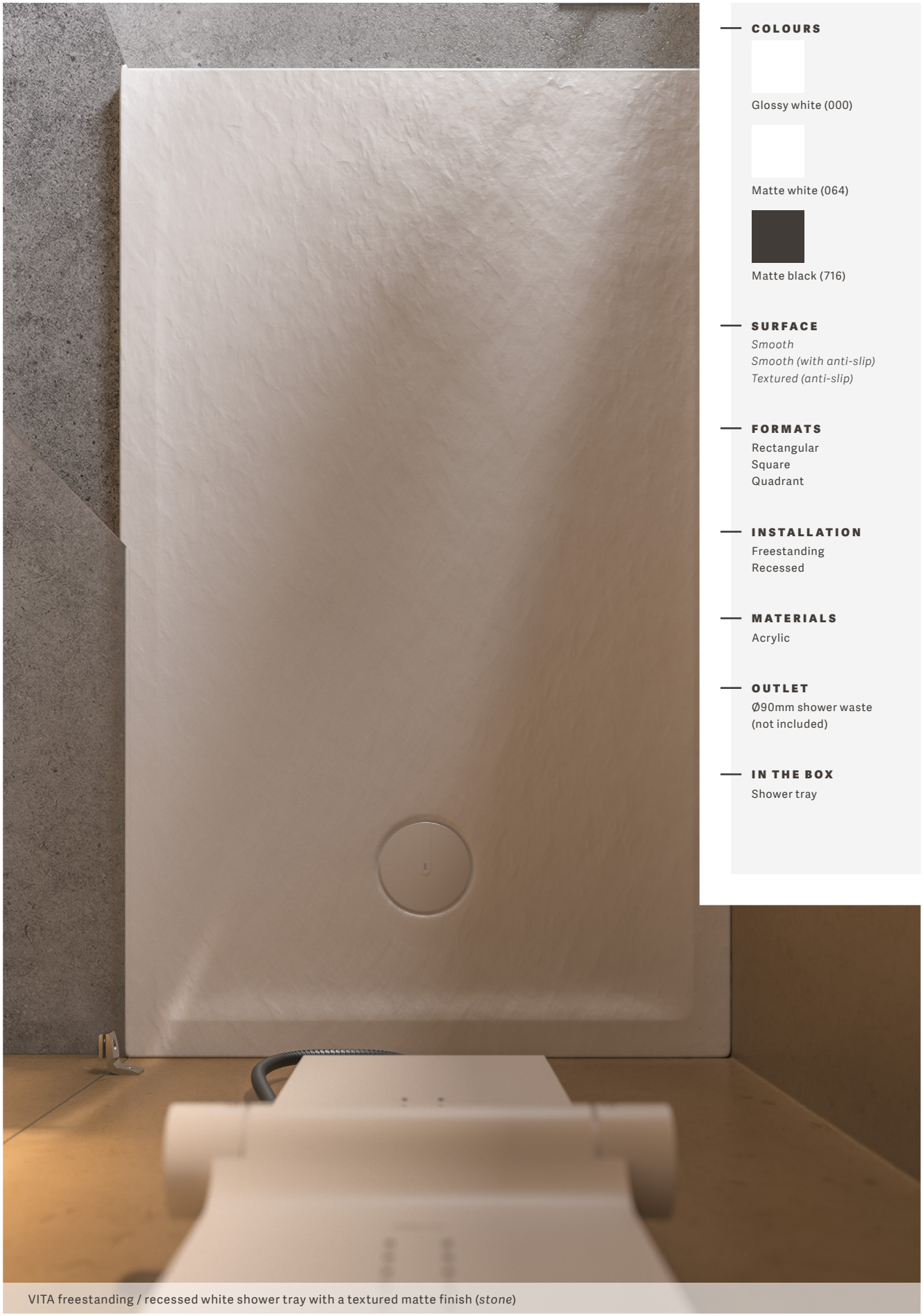

VITA freestanding / recessed white shower tray with a textured matte finish (*stone*)

COLOURS

Glossy white (000)

Matte white (064)

Matte black (716)

SURFACE

Smooth
Smooth (with anti-slip)
Textured (anti-slip)

FORMATS

Rectangular
Square
Quadrant

INSTALLATION

Freestanding
Recessed

MATERIALS

Acrylic

OUTLET

Ø90mm shower waste
(not included)

IN THE BOX

Shower tray

RECTANGULAR

NEW

Freestanding / recessed shower trays - W. 900

> freestanding / recessed application
> textured surface (*stone* antislip)
> 40/50mm profile
> in the box: shower tray



Matte white (064)



Matte black (716)

Measurements	Reference	Weight	P.P.*	€
1600 x 900 x 50	S202 1130 00.. .00	15	10	•
1400 x 900 x 40	S202 1120 00.. .00	14	10	•
1200 x 900 x 40	S202 1110 00.. .00	13	10	•
1000 x 900 x 40	S202 1100 00.. .00	11	10	•

Ø90 Anti-siphon shower waste

> plastic and rubber body, dome finish in the same colour as the shower tray
> in the box: shower waste

Matte white			
S502 1000 000C 600	1	12	•
Matte black			
S502 1000 0071 600	1	12	•

NEW

Freestanding / recessed shower trays - W. 900

> freestanding / recessed application
> smooth surface (with antislip)
> 40/50mm profile
> in the box: shower tray



Measurements	Reference	Weight	P.P.*	€
1600 x 900 x 50	S202 1138 1600 000	15	10	•
1400 x 900 x 40	S202 1128 1600 000	14	10	•
1200 x 900 x 40	S202 1118 1600 000	13	10	•
1000 x 900 x 40	S202 1108 1600 000	11	10	•

Ø90 Anti-siphon shower waste

> plastic and rubber body, chrome plated *abs* dome
> in the box: shower waste

S502 1000 0012 600	1	-	•

NEW

Freestanding / recessed shower trays - W. 900

> freestanding / recessed application
> smooth surface
> 40/50mm profile
> in the box: shower tray



Measurements	Reference	Weight	P.P.*	€
1600 x 900 x 50	S202 1130 0000 000	15	10	•
1400 x 900 x 40	S202 1120 0000 000	14	10	•
1200 x 900 x 40	S202 1110 0000 000	13	10	•
1000 x 900 x 40	S202 1100 0000 000	11	10	•

Ø90 Anti-siphon shower waste

> plastic and rubber body, chrome plated *abs* dome
> in the box: shower waste

S502 1000 0012 600	1	-	•

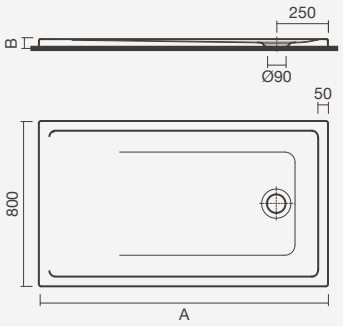

	A	B
1800 x 800	1800	50
1700 x 800	1700	50
1600 x 800	1600	50
1500 x 800	1500	50
1400 x 800	1400	40
1300 x 800	1300	40
1200 x 800	1200	40
1100 x 800	1100	40
1000 x 800	1000	40

RECTANGULAR

Freestanding / recessed shower trays - W. 800

> freestanding / recessed application
> textured surface (*stone* antislip)
> 40/50mm profile
> in the box: shower tray

Measurements	Reference	Weight	P.P.*	€
1800 x 800 x 50	S202 0730 00.. .00	20	10	•
1700 x 800 x 50	S202 0740 00.. .00	18	10	•
1600 x 800 x 50	S202 0750 00.. .00	17	10	•
1500 x 800 x 50	S202 0760 00.. .00	16	10	•
1400 x 800 x 40	S202 0770 00.. .00	14	10	•
1300 x 800 x 40	S202 0780 00.. .00	13	10	•
1200 x 800 x 40	S202 0790 00.. .00	12	10	•
1100 x 800 x 40	S202 0800 00.. .00	11	10	•
1000 x 800 x 40	S202 0810 00.. .00	10	10	•



Matte White (064)



Matte Black (716)

Ø90 Anti-siphon shower waste

> plastic and rubber body, dome finish in the same colour as the shower tray
> in the box: shower waste

Matte white			
S502 1000 000C 600	1	12	•
Matte black			
S502 1000 0071 600	1	12	•

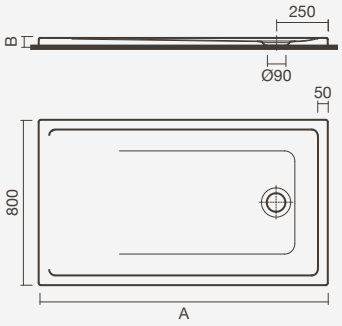

	A	B
1800 x 800	1800	50
1700 x 800	1700	50
1600 x 800	1600	50
1500 x 800	1500	50
1400 x 800	1400	40
1300 x 800	1300	40
1200 x 800	1200	40
1100 x 800	1100	40
1000 x 800	1000	40

Freestanding / recessed shower trays - W. 800

> freestanding / recessed application
> smooth surface (with antislip)
> 40/50mm profile
> in the box: shower tray

Measurements	Reference	Weight	P.P.*	€
1800 x 800 x 50	S202 0738 1600 000	20	10	•
1700 x 800 x 50	S202 0748 1600 000	18	10	•
1600 x 800 x 50	S202 0758 1600 000	17	10	•
1500 x 800 x 50	S202 0768 1600 000	16	10	•
1400 x 800 x 40	S202 0778 1600 000	14	10	•
1300 x 800 x 40	S202 0788 1600 000	13	10	•
1200 x 800 x 40	S202 0798 1600 000	12	10	•
1100 x 800 x 40	S202 0808 1600 000	11	10	•
1000 x 800 x 40	S202 0818 1600 000	10	10	•



Ø90 Anti-siphon shower waste

> plastic and rubber body, chrome plated *abs* dome
> in the box: shower waste

S502 1000 0012 600	1	-	•

RECTANGULAR



Freestanding / recessed shower trays - W. 800

> freestanding / recessed application
> smooth surface
> 40/50mm profile
> in the box: shower tray

Measurements	Reference	Weight	P.P.*	€
1800 x 800 x 50	S202 0730 0000 000	20	10	•
1700 x 800 x 50	S202 0740 0000 000	18	10	•
1600 x 800 x 50	S202 0750 0000 000	17	10	•
1500 x 800 x 50	S202 0760 0000 000	16	10	•
1400 x 800 x 40	S202 0770 0000 000	14	10	•
1300 x 800 x 40	S202 0780 0000 000	13	10	•
1200 x 800 x 40	S202 0790 0000 000	12	10	•
1100 x 800 x 40	S202 0800 0000 000	11	10	•
1000 x 800 x 40	S202 0810 0000 000	10	10	•

Ø90 Anti-siphon shower waste

> plastic and rubber body, chrome plated *abs* dome
> in the box: shower waste

S502 1000 0012 600	1	-	•

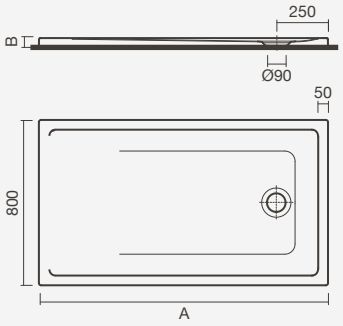

	A	B
1800 x 800	1800	50
1700 x 800	1700	50
1600 x 800	1600	50
1500 x 800	1500	50
1400 x 800	1400	40
1300 x 800	1300	40
1200 x 800	1200	40
1100 x 800	1100	40
1000 x 800	1000	40



VITA freestanding / recessed black shower tray with a textured matte finish (*stone*)

RECTANGULAR

NEW

Freestanding / recessed shower trays - W. 700

> freestanding / recessed application
> textured surface (*stone* antislip)
> 40/50mm profile
> in the box: shower tray



Matte White (064)



Matte Black (716)

Measurements	Reference	Weight	P.P.*	€
1700 x 700 x 50	S202 1090 00.. .00	14	10	•
1600 x 700 x 50	S202 1080 00.. .00	13	10	•
1400 x 700 x 40	S202 1060 00.. .00	12	10	•
1200 x 700 x 40	S202 1050 00.. .00	11	10	•
1000 x 700 x 40	S202 1040 00.. .00	10	10	•

Ø90 Anti-siphon shower waste

> plastic and rubber body, dome finish in the same colour as the shower tray
> in the box: shower waste

Matte white				
S502 1000 000C 600		1	12	•
Matte black				
S502 1000 0071 600		1	12	•

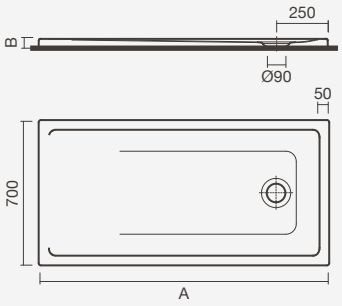

	A	B
1700 x 700	1700	50
1600 x 700	1600	50
1400 x 700	1400	40
1200 x 700	1200	40
1000 x 700	1000	40

NEW

Freestanding / recessed shower trays - W. 700

> freestanding / recessed application
> smooth surface (with antislip)
> 40/50mm profile
> in the box: shower tray



Measurements	Reference	Weight	P.P.*	€
1700 x 700 x 50	S202 1098 1600 000	14	10	•
1600 x 700 x 50	S202 1088 1600 000	13	10	•
1400 x 700 x 40	S202 1068 1600 000	12	10	•
1200 x 700 x 40	S202 1058 1600 000	11	10	•
1000 x 700 x 40	S202 1048 1600 000	10	10	•

Ø90 Anti-siphon shower waste

> plastic and rubber body, chrome plated *abs* dome
> in the box: shower waste

S502 1000 0012 600		1	12	•

NEW

Freestanding / recessed shower trays - W. 700

> freestanding / recessed application
> smooth surface
> 40/50mm profile
> in the box: shower tray



Measurements	Reference	Weight	P.P.*	€
1700 x 700 x 50	S202 1090 0000 000	14	10	•
1600 x 700 x 50	S202 1080 0000 000	13	10	•
1400 x 700 x 40	S202 1060 0000 000	12	10	•
1200 x 700 x 40	S202 1050 0000 000	11	10	•
1000 x 700 x 40	S202 1040 0000 000	10	10	•

Ø90 Anti-siphon shower waste

> plastic and rubber body, chrome plated *abs* dome
> in the box: shower waste

S502 1000 0012 600		1	12	•



VITA freestanding / recessed white shower tray with a textured matte finish (*stone*)



VITA freestanding / recessed white shower tray with a smooth glossy finish

SQUARE

NEW

Freestanding / recessed square shower trays

> freestanding / recessed application
> textured surface (*stone* antislip)
> 55mm profile
> in the box: shower tray

Measurements	Reference	Weight	P.P.*	€
1000 x 1000 x 55	S202 1140 00.. .00	14	10	•
900 x 900 x 55	S202 1150 00.. .00	7	10	•
800 x 800 x 55	S202 1160 00.. .00	6	10	•



Matte white (064)



Matte black (716)

Ø90 Anti-siphon shower waste

> plastic and rubber body, dome finish in the same colour as the shower tray
> in the box: shower waste

Matte white				
S502 1000 000C 600		1	12	•
Matte black				
S502 1000 0071 600		1	12	•

NEW

Freestanding / recessed square shower trays

> freestanding / recessed application
> smooth surface (with antislip)
> 55mm profile
> in the box: shower tray

Measurements	Reference	Weight	P.P.*	€
1000 x 1000 x 55	S202 1148 1600 000	14	10	•
900 x 900 x 55	S202 1158 1600 000	10	10	•
800 x 800 x 55	S202 1168 1600 000	6	10	•



Ø90 Anti-siphon shower waste

> plastic and rubber body, chrome plated *abs* dome
> in the box: shower waste

S502 1000 0012 600		1	12	•

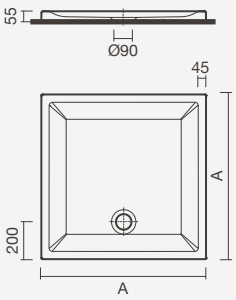

	A
800 x 800	800
900 x 900	900
1000 x 1000	1000

NEW

Freestanding / recessed square shower trays

> freestanding / recessed application
> smooth surface
> 55mm profile
> in the box: shower tray

Measurements	Reference	Weight	P.P.*	€
1000 x 1000 x 55	S202 1140 0000 000	14	10	•
900 x 900 x 55	S202 1150 0000 000	7	10	•
800 x 800 x 55	S202 1160 0000 000	6	10	•



Ø90 Anti-siphon shower waste

> plastic and rubber body, chrome plated *abs* dome
> in the box: shower waste

S502 1000 0012 600		1	12	•

QUADRANT

NEW

Freestanding / recessed quadrant shower trays

> freestanding / recessed application
> textured surface (*stone* antislip)
> 55mm profile
> in the box: shower tray



Matte white (064)



Matte black (716)

Measurements	Reference	Weight	P.P.*	€
1000 x 1000 x 55	S202 1170 00.. .00	14	10	•
900 x 900 x 55	S202 1180 00.. .00	7	10	•
800 x 800 x 55	S202 1190 00.. .00	6	10	•

Ø90 Anti-siphon shower waste

> plastic and rubber body, dome finish in the same colour as the shower tray
> in the box: shower waste

Matte white				
S502 1000 000C 600		1	12	•
Matte black				
S502 1000 0071 600		1	12	•

NEW

Freestanding / recessed quadrant shower trays

> freestanding / recessed application
> smooth surface (with antislip)
> 55mm profile
> in the box: shower tray



Measurements	Reference	Weight	P.P.*	€
1000 x 1000 x 55	S202 1178 1600 000	14	10	•
900 x 900 x 55	S202 1188 1600 000	7	10	•
800 x 800 x 55	S202 1198 1600 000	6	10	•

Ø90 Anti-siphon shower waste

> plastic and rubber body, chrome plated *abs* dome
> in the box: shower waste

S502 1000 0012 600	1	12	•

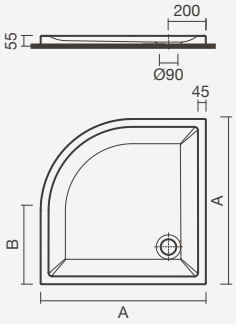

	A	B
800 x 800	800	300
900 x 900	900	400
1000 x 1000	1000	500

NEW

Freestanding / recessed quadrant shower trays

> freestanding / recessed application
> smooth surface
> 55mm profile
> in the box: shower tray



Measurements	Reference	Weight	P.P.*	€
1000 x 1000 x 55	S202 1170 0000 000	14	10	•
900 x 900 x 55	S202 1180 0000 000	7	10	•
800 x 800 x 55	S202 1190 0000 000	6	10	•

Ø90 Anti-siphon shower waste

> plastic and rubber body, chrome plated *abs* dome
> in the box: shower waste

S502 1000 0012 600	1	12	•

Julia



JULIA 1600 x 800mm freestanding rectangular shower tray with anti-slip surface and EDGE Float hydromassage column

COLOURS

White

SURFACE

Smooth

Rectangular (Recessed)
Square (Recessed)

Anti-slip

Rectangular (Freestanding)
Rectangular (Recessed)
Square (Freestanding)
Square (Recessed)

FORMATS

Rectangular
Square

INSTALLATION

Freestanding
Recessed

MATERIAL

Acrylic

SHOWER WASTE

Ø65mm shower waste
(not included)

IN THE BOX

Shower tray

RECTANGULAR







Freestanding rectangular shower trays

> freestanding application
> anti-slip surface
> 50mm bowl and 75mm profile
> in the box: shower tray

Measurements	Reference	Weight	P.P.*	€
1600 x 800 x 75	S200 3127 2500 000	16	6	•
1400 x 800 x 75	S200 3117 2500 000	15	6	•
1200 x 800 x 75	S200 3107 2500 000	14	6	•
1000 x 800 x 75	S200 3097 2500 000	12	6	•
900 × 750 × 75	S200 3157 2500 000	10	6	•

Ø65 Anti-siphon shower waste

> plastic and rubber body, chrome plated *abs* dome
> in the box: shower waste

TN20 0038 7865 0700	1	-	•

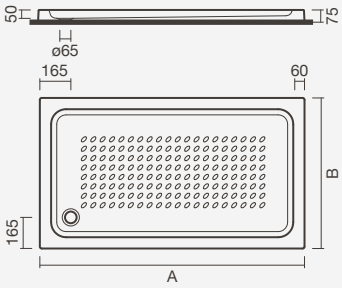

	A	B
1600 x 800 x 75	1600	800
1400 x 800 x 75	1400	800
1200 x 800 x 75	1200	800
1000 x 800 x 75	1000	800
900 x 750 x 75	900	750







Recessed rectangular shower trays

> recessed application
> anti-slip surface
> 50mm bowl and 35mm profile
> in the box: shower tray

Measurements	Reference	Weight	P.P.*	€
1600 x 800 x 35	S200 3127 2400 000	15	6	•
1400 x 800 x 35	S200 3117 2400 000	15	6	•
1200 x 800 x 35	S200 3107 2400 000	14	6	•
1000 x 800 x 35	S200 3097 2400 000	12	6	•
900 x 750 x 35	S200 3157 2400 000	9	10	•

Ø65 Anti-siphon shower waste

> plastic and rubber body, chrome plated *abs* dome
> in the box: shower waste

TN20 0038 7865 0700	1	-	•

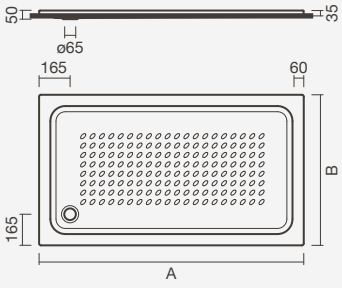

	A	B
1600 x 800 x 35	1600	800
1400 x 800 x 35	1400	800
1200 x 800 x 35	1200	800
1000 x 800 x 35	1000	800
900 x 750 x 35	900	750



Recessed rectangular shower tray

> recessed application
> smooth surface
> 140mm bowl and 35mm profile
> in the box: shower tray

Measurements	Reference	Weight	P.P.*	€
900 x 750 x 35	S200 3157 2700 000	9	10	•

Ø65 Anti-siphon shower waste

> plastic and rubber body, chrome plated *abs* dome
> in the box: shower waste

TN20 0038 7865 0700	1	-	•

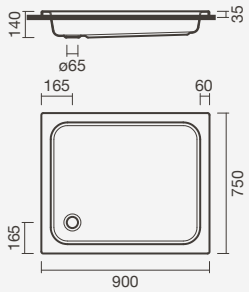

SQUARE





Freestanding square shower trays

> freestanding application
> anti-slip surface
> 50mm bowl and 75mm profile
> in the box: shower tray

Measurements	Reference	Weight	P.P.*	€
900 x 900 x 75	S200 3167 2500 000	9	10	•
800 x 800 x 75	S200 3147 2500 000	8	10	•
700 x 700 x 75	S200 3137 2500 000	7	10	•

Ø65 Anti-siphon shower waste

> plastic and rubber body, chrome plated *abs* dome
> in the box: shower waste

TN20 0038 7865 0700	1	-	•

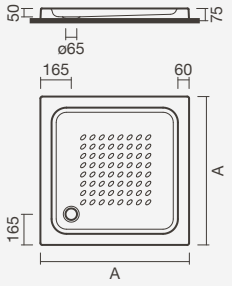

	A
900 x 900 x 75	900
800 x 800 x 75	800
700 x 700 x 75	700




Freestanding square shower trays

> freestanding application
> anti-slip surface
> 80mm bowl and 150mm profile
> in the box: shower tray

Measurements	Reference	Weight	P.P.*	€
800 x 800 x 150	S200 3147 2600 000	13	10	•
700 x 700 x 150	S200 3137 2600 000	8	10	•

Ø65 Anti-siphon shower waste

> plastic and rubber body, chrome plated *abs* dome
> in the box: shower waste

TN20 0038 7865 0700	1	-	•

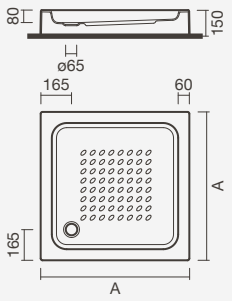

	A
800 x 800 x 150	800
700 x 700 x 150	700





Recessed square shower trays

> recessed application
> anti-slip surface
> 50mm bowl and 35mm profile
> in the box: shower tray

Measurements	Reference	Weight	P.P.*	€
900 x 900 x 35	S200 3167 2400 000	9	10	•
800 x 800 x 35	S200 3147 2400 000	8	10	•
700 x 700 x 35	S200 3137 2400 000	7	10	•

Ø65 Anti-siphon shower waste

> plastic and rubber body, chrome plated *abs* dome
> in the box: shower waste

TN20 0038 7865 0700	1	-	•

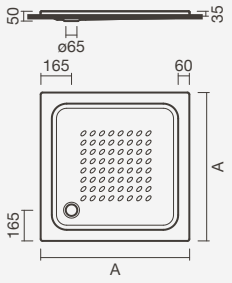

	A
900 x 900 x 35	900
800 x 800 x 35	800
700 x 700 x 35	700

SQUARE







Recessed square shower trays

> recessed application
> smooth surface
> 150mm bowl and 35mm profile
> in the box: shower tray

Measurements	Reference	Weight	P.P.*	€
900 x 900 x 35	S200 3167 2700 000	11	10	•
800 x 800 x 35	S200 3147 2700 000	11	10	•
700 x 700 x 35	S200 3137 2700 000	8	10	•

Ø65 Anti-siphon shower waste

> plastic and rubber body, chrome plated *abs* dome
> in the box: shower waste

TN20 0038 7865 0700	1	-	•

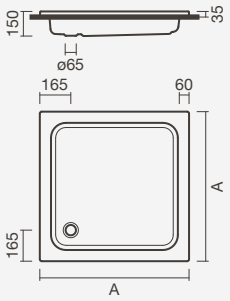

	A
900 x 900 x 35	900
800 x 800 x 35	800
700 x 700 x 35	700



JULIA 800 x 800mm freestanding square shower tray with anti-slip surface

Esfera



COLOURS

White

SURFACE

Anti-slip

FORMATS

Rectangular
Square
Quadrant

INSTALLATION

Freestanding

MATERIAL

Acrylic

SHOWER WASTE

Ø55mm shower waste (not included)

IN THE BOX

Shower tray

ESFERA 1600 x 700mm freestanding rectangular shower tray with YN Black hydromassage column

RECTANGULAR



Freestanding rectangular shower trays

> freestanding application
> anti-slip surface
> 50mm bowl and 80mm profile
> in the box: shower tray

Measurements	Reference	Weight	P.P.*	€
1700 x 700 x 80	S200 2611 1500 000	21	5	•
1600 x 700 x 80	S200 2601 1500 000	20	5	•
1500 x 700 x 80	S200 2591 1500 000	17	5	•
1400 x 700 x 80	S200 2581 1500 000	16	5	•
1300 x 700 x 80	S200 2571 1500 000	15	5	•
1200 x 700 x 80	S200 2561 1500 000	14	5	•
1100 x 700 x 80	S200 2551 1500 000	12	5	•
1000 x 700 x 80	S200 2531 1500 000	10	5	•

Ø55 Anti-siphon shower waste

> plastic and rubber body, chrome plated *abs* dome
> in the box: shower waste

TN20 0037 7855 0700	1	-	•

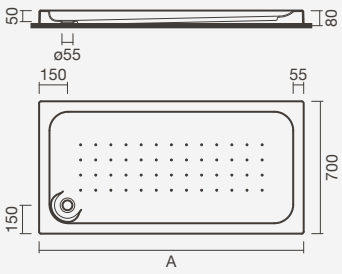

	A
1700 x 700 x 80	1700
1600 x 700 x 80	1600
1500 x 700 x 80	1500
1400 x 700 x 80	1400
1300 x 700 x 80	1300
1200 x 700 x 80	1200
1100 x 700 x 80	1100
1000 x 700 x 80	1000

SQUARE



Freestanding square shower trays

> freestanding application
> anti-slip surface
> 50mm bowl and 80mm profile
> in the box: shower tray

Measurements	Reference	Weight	P.P.*	€
1000 x 1000 x 80	S200 2541 1500 000	14	10	•
900 x 900 x 80	S200 2651 1500 000	12	10	•
800 x 800 x 80	S200 2631 1500 000	10	10	•

Ø55 Anti-siphon shower waste

> plastic and rubber body, chrome plated *abs* dome
> in the box: shower waste

TN20 0037 7855 0700	1	-	•

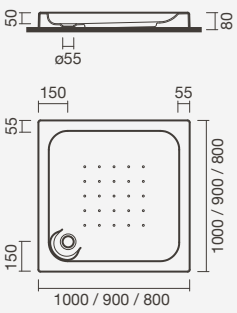

QUADRANT



Freestanding quadrant shower trays

> freestanding application
> anti-slip surface
> 50mm bowl and 80mm profile
> in the box: shower tray

Measurements	Reference	Weight	P.P.*	€
900 x 900 x 80	S200 2641 1500 000	12	10	•
800 x 800 x 80	S200 2621 1500 000	10	10	•

Ø55 Anti-siphon shower waste

> plastic and rubber body, chrome plated *abs* dome
> in the box: shower waste

TN20 0037 7855 0700	1	-	•

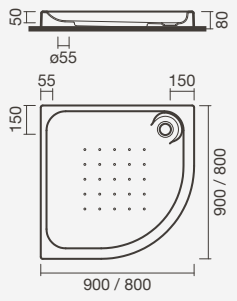

Calisson

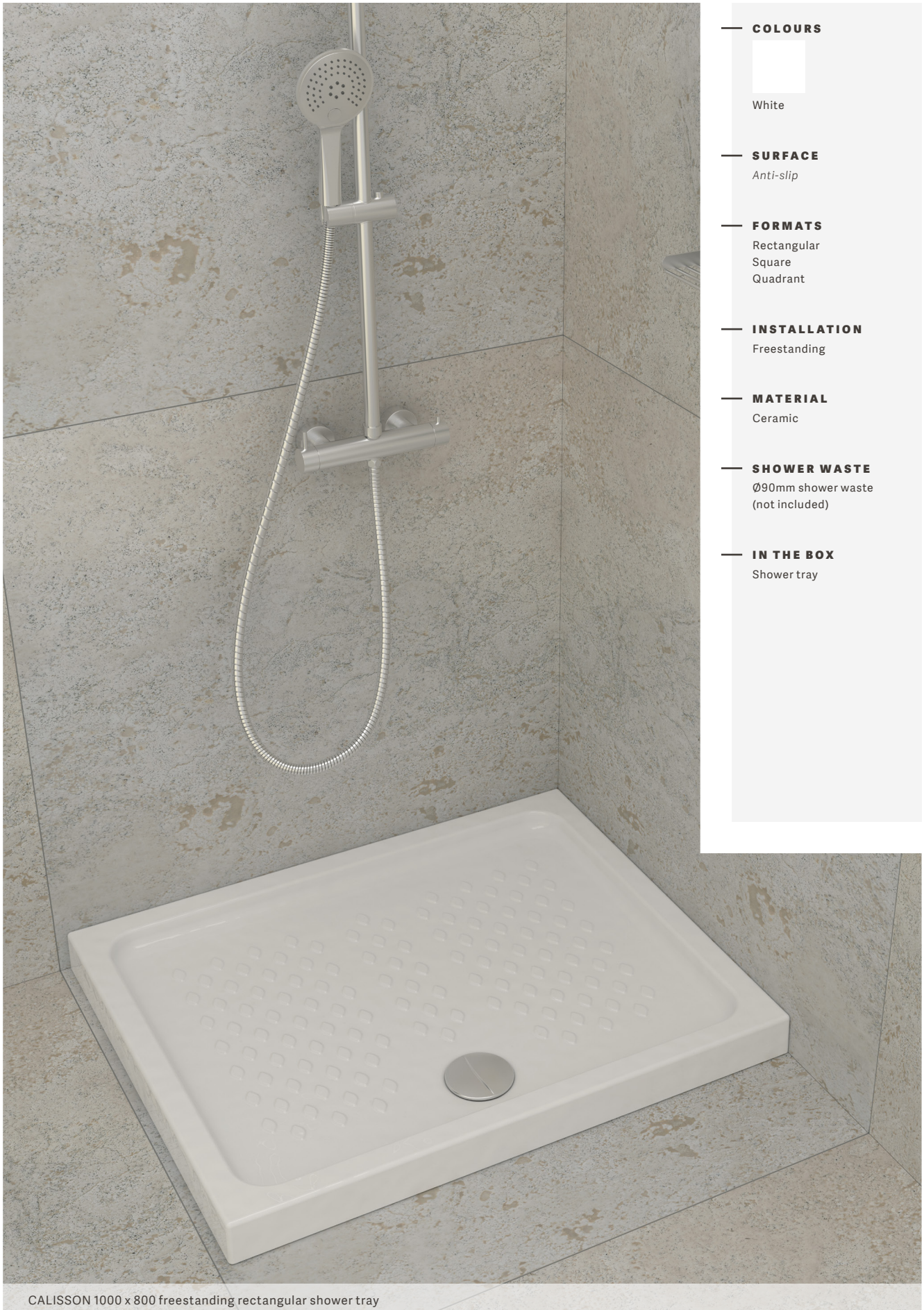

CALISSON 1000 x 800 freestanding rectangular shower tray

COLOURS

White

SURFACE

Anti-slip

FORMATS

Rectangular
Square
Quadrant

INSTALLATION

Freestanding

MATERIAL

Ceramic

SHOWER WASTE

Ø90mm shower waste (not included)

IN THE BOX

Shower tray

RECTANGULAR

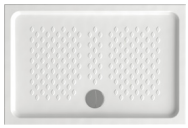



Freestanding rectangular shower trays - L. 800

> freestanding application
> anti-slip surface
> 80mm profile
> in the box: shower tray

Measurements	Reference	Weight	P.P.*	€
1200 x 800 x 80	S102 1040 0000 000	45	11	•
1000 x 800 x 80	S102 1060 0000 000	37	11	•

Ø90 Anti-siphon shower waste

> plastic and rubber body, chrome plated *abs* dome
> in the box: shower waste

	TN10 0049 0000 0000	1	-	•

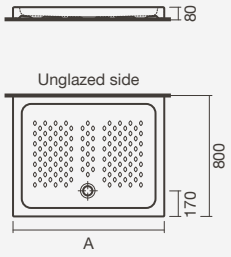

	A
1200 x 800 x 80	1200
1000 x 800 x 80	1000

RECTANGULAR

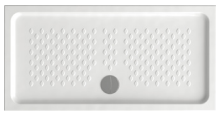

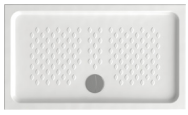

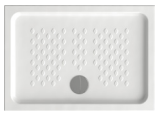

Freestanding rectangular shower trays - L. 700

> freestanding application
> anti-slip surface
> 80mm profile
> in the box: shower tray

Measurements	Reference	Weight	P.P.*	€
1400 x 700 x 80	S102 1030 0000 000	44	12	•
1200 x 700 x 80	S102 1050 0000 000	39	11	•
1000 x 700 x 80	S102 1070 0000 000	33	11	•

Ø90 Anti-siphon shower waste

> plastic and rubber body, chrome plated *abs* dome
> in the box: shower waste

	TN10 0049 0000 0000	1	-	•

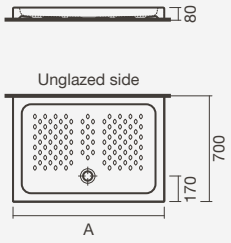

	A
1400 x 700 x 80	1400
1200 x 700 x 80	1200
1000 x 700 x 80	1000

RECTANGULAR



Freestanding rectangular shower tray - L. 720

> freestanding application
> anti-slip surface
> 80mm profile
> in the box: shower tray

Measurements	Reference	Weight	P.P.*	€
900 x 720 x 80	S102 1080 0000 000	32	13	•

Ø90 Anti-siphon shower waste

> plastic and rubber body, chrome plated *abs* dome
> in the box: shower waste

	TN10 0049 0000 0000	1	-	•

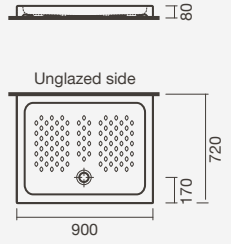

SQUARE







Freestanding square shower trays

> freestanding application
> anti-slip surface
> 80mm profile
> in the box: shower tray

Measurements	Reference	Weight	P.P.*	€
900 x 900 x 80	S102 1090 0000 000	41	13	•
800 x 800 x 80	S102 1100 0000 000	30	13	•
700 x 700 x 80	S102 1110 0000 000	24	13	•

Ø90 Anti-siphon shower waste

> plastic and rubber body, chrome plated *abs* dome
> in the box: shower waste

TN10 0049 0000 0000	1	-	•

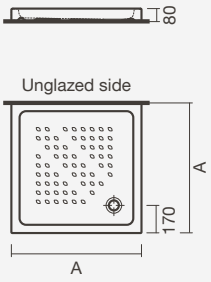

	A
900 x 900 x 80	900
800 x 800 x 80	800
700 x 700 x 80	700

QUADRANT





Freestanding quadrant shower trays

> freestanding application
> anti-slip surface
> 80mm profile
> in the box: shower tray

Measurements	Reference	Weight	P.P.*	€
900 x 900 x 80	S102 1120 0000 000	33	13	•
800 x 800 x 80	S102 1130 0000 000	27	13	•

Ø90 Anti-siphon shower waste

> plastic and rubber body, chrome plated *abs* dome
> in the box: shower waste

TN10 0049 0000 0000	1	-	•

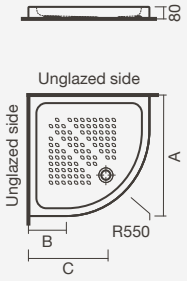

	A	B	C
900 x 900 x 80	900	350	625
800 x 800 x 80	800	250	525



CALISSON 900 x 900 freestanding square shower tray

Universal

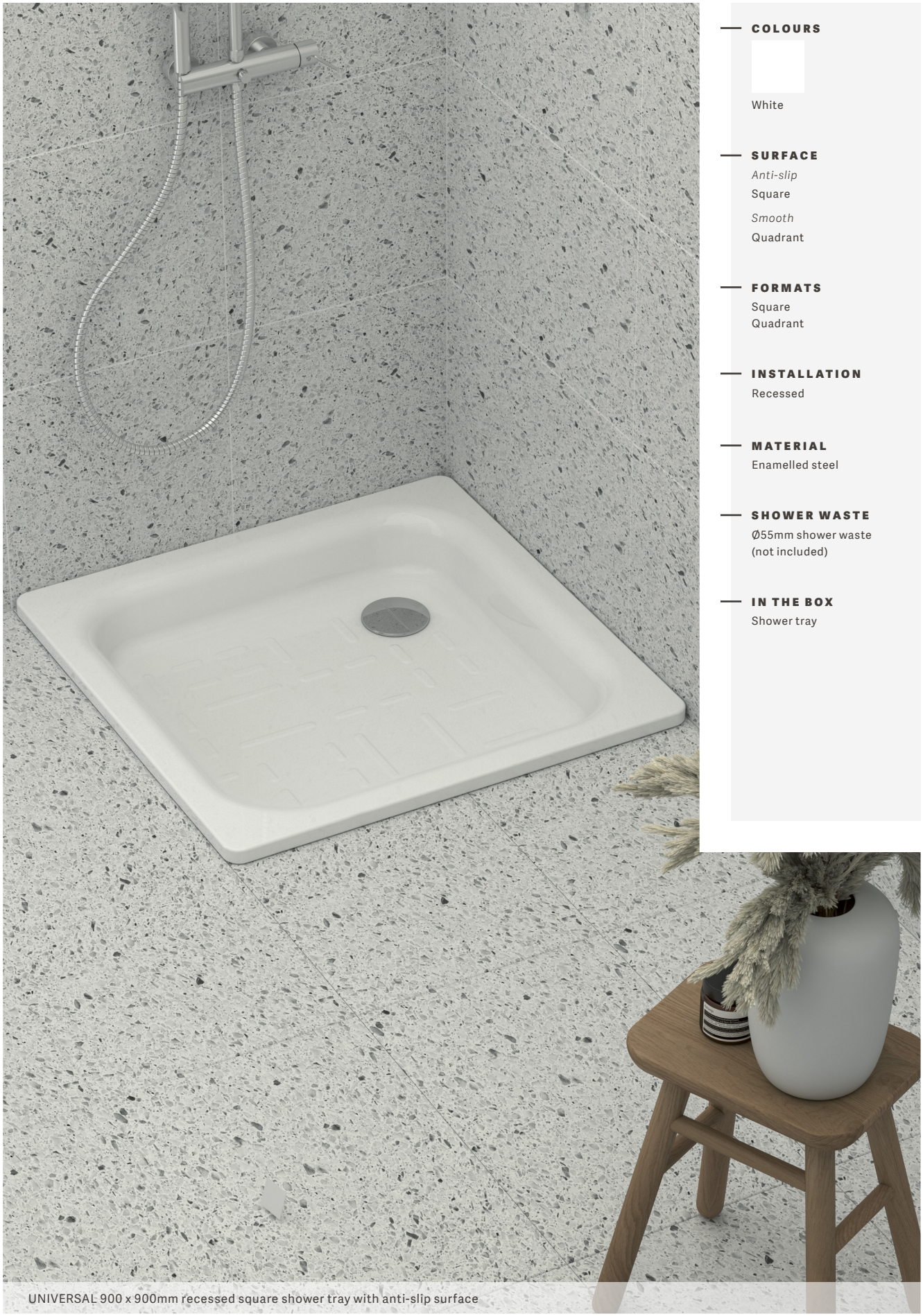

UNIVERSAL 900 x 900mm recessed square shower tray with anti-slip surface

COLOURS

White

SURFACE

Anti-slip
Square

Smooth
Quadrant

FORMATS

Square
Quadrant

INSTALLATION

Recessed

MATERIAL

Enamelled steel

SHOWER WASTE

Ø55mm shower waste (not included)

IN THE BOX

Shower tray

SQUARE



Recessed square shower trays

> recessed application
> anti-slip surface
> 145mm bowl (135mm in the 700x700mm shower tray) and 28mm profile
> in the box: shower tray

Measurements	Reference	Weight	P.P.*	€
900 x 900 x 28	S300 0354 9200 000	14	40	•
800 x 800 x 28	S300 0300 4300 000	8	50	•
700 x 700 x 28	S300 0340 4300 000	5	50	•



Ø55 Anti-siphon shower waste

> plastic and rubber body, chrome plated *abs* dome
> in the box: shower waste

TN20 0037 7855 0700	1	-	•



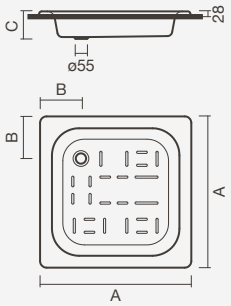

	A	B	C
900 x 900 x 145	900	220	145
800 x 800 x 145	800	205	145
700 x 700 x 135	700	195	135

QUADRANT

Recessed quadrant shower tray

> recessed application
> smooth surface
> 120mm bowl and 21mm profile
> in the box: shower tray

Measurements	Reference	Weight	P.P.*	€
700 x 700 x 21	S302 0421 2000 000	6	15	•



Ø55 Anti-siphon shower waste

> plastic and rubber body, chrome plated *abs* dome
> in the box: shower waste

TN20 0037 7855 0700	1	-	•

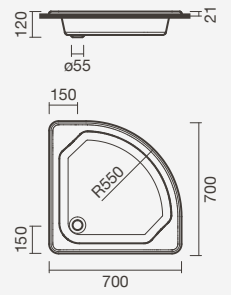



UNIVERSAL 700 x 700mm recessed quadrant shower tray with smooth surface


Aesop.
MOUTHWASH
BAIN DE BOUCHE



Enclosures

Introduction

Information 444

Shower enclosures

Open 446

Evolve 454

Step Up 460

Bath enclosures

Step Up 470

Enclosures

Select the right enclosure



Variety

Natural Evolution

Safety and comfort for your everyday life

A warm shower in winter or a quick shower after jogging: showering starts the day with the right boost. This is, until you flood the bathroom floor. Yes, showers are great, but a high-quality enclosure is essential. Learn more about our range.

Typologies

Application

Different solutions for each preference

Discover a line of enclosures, especially designed for all the singularities of your shower areas - for application with shower trays or bathtubs.

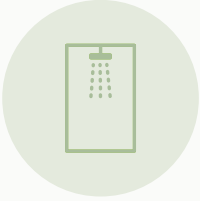

Shower

Available for corner or between-walls applications, our models are compatible with rectangular, square and quadrant shower trays. Pick a conventional enclosure (panelled all around) or a more modern walk-in version for an easier access to the shower area.

Available in these collections:
Open · Evolve . Step Up



Bathtub

These enclosures are specifically designed for when the tub also doubles as the shower. They are available with one simple panel – one single pivoting glass panel – or double – with one fixed panel and one pivoting panel – that provides greater protection against spatter.

Available in these collections:
Step Up

Technology

Safety and comfort

No worries

The bathroom is one of the rooms in the house where security is of utmost importance. That is why we chose to equip all of our shower enclosures with tempered safety glass and magnetic fastening (when applicable).

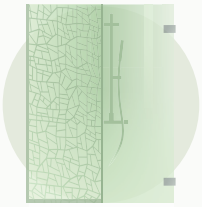

Tempered glass

Our enclosures are made with 6-8mm thick tempered safety glass. These are heat-treated to improve their resistance, with the particularity of breaking into small fragments when an accident occurs. This helps prevent more serious injuries.

Available in these collections:
All the collections

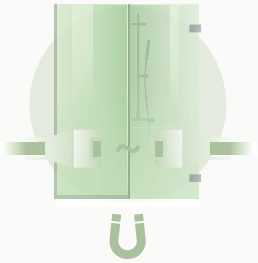

Magnetic fastening

In order to avoid accidents it is paramount to keep the water within the shower area. This is why our shower enclosures (except for the Open collection) come equipped with magnetic door fastening(s) that prevents any water from leaking out.

Available in these collections:
Evolve · **Step Up**

Innovations

Adaptability and cleanliness

Technologies that simplify everything

When selecting an enclosure it is very important to consider not only the area where it will be installed, but also the user´s expectations. Bearing that in mind, we have developed enclosures that not only simplify the assembly process, but also the everyday life of its users.



Compensation

Our enclosures include a compensation system to enable adjustment to the space where they will be installed. Simple arrangements level any unevenness between 50 to 100 mm by regulating the inclination of the doors thus achieving perfect closing.

Available in these collections:
Evolve · **Step Up** (Shower)



Sliding system

Picking an enclosure with a sliding door is the perfect way of maximising space for a smaller bathroom. By avoiding an enclosure with one or more doors that open outwards, you will be able to take better advantage of the bathroom space.

Available in these collections:
Evolve · **Step Up** (Shower)



Anti-limescale

The glass panels in some of our enclosures go through an anti-limescale treatment, which alters their molecular structure to repel water and minimises any limescale and dirt incrustations. This treatment keeps the enclosure effortlessly clean for a longer period.

Available in these collections:
Evolve · **Step Up**



Maintenance

We are aware that conventional sliding doors are not always easy to clean. That is precisely why our Evolve and Step collections include a door-releasing system. Thanks to the a spring mechanism the doors move inwards to enable cleaning between the glass panels.

Available in these collections:
Evolve · **Step Up** (Shower)

Open



OPEN *walk-in* shower enclosure - front panel + side panel + door

MODELS
Front
Front + Door
Front + Side
Front + Side + Door

APPLICATIONS
Corner
Between-walls

FORMATS
Rectangular

DIMENSIONS
From 1000 x 700 mm
up to 1900 x 900 mm
1950mm height

MATERIALS
Profiles
Chrome plated brass
Glass
Safety glass - 8mm
(tempered)

IN THE BOX
Shower enclosure
and fixing kit



OPEN *walk-in* shower enclosure - front panel + side panel



8mm tempered
safety glass

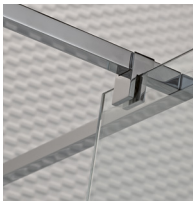

Chrome plated
brass profiles

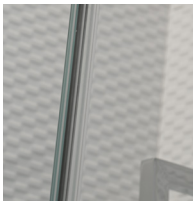

Translucid
sealants



Minimalistic aesthetics
metallic elements

CORNER APPLICATION - Front + Side + Door

Shower enclosures - Width 900

Shower tray size	Front panel size	Reference	Weight	€
1900 x 900	1260	S600 6603 9112 000	98	•
1800 x 900	1160	S600 6593 9112 000	95	•
1700 x 900	1060	S600 6583 9112 000	90	•
1600 x 900	980	S600 6573 9112 000	88	•
1500 x 900	880	S600 6563 9112 000	83	•
1400 x 900	780	S600 6553 9112 000	78	•
1300 x 900	680	S600 6543 9112 000	75	•

Shower enclosures - Width 800

Shower tray size	Front panel size	Reference	Weight	€
1900 x 800	1260	S600 6603 9012 000	93	•
1800 x 800	1160	S600 6593 9012 000	90	•
1700 x 800	1060	S600 6583 9012 000	85	•
1600 x 800	980	S600 6573 9012 000	83	•
1500 x 800	880	S600 6563 9012 000	78	•
1400 x 800	780	S600 6553 9012 000	73	•
1300 x 800	680	S600 6543 9012 000	70	•

Shower enclosures - Width 750

Shower tray size	Front panel size	Reference	Weight	€
1900 x 750	1260	S600 6603 8912 000	92	•
1800 x 750	1160	S600 6593 8912 000	89	•
1700 x 750	1060	S600 6583 8912 000	84	•
1600 x 750	980	S600 6573 8912 000	82	•
1500 x 750	880	S600 6563 8912 000	77	•
1400 x 750	780	S600 6553 8912 000	72	•
1300 x 750	680	S600 6543 8912 000	69	•

Shower enclosures - Width 700

Shower tray size	Front panel size	Reference	Weight	€
1900 x 700	1260	S600 6603 8812 000	90	•
1800 x 700	1160	S600 6593 8812 000	87	•
1700 x 700	1060	S600 6583 8812 000	82	•
1600 x 700	980	S600 6573 8812 000	80	•
1500 x 700	880	S600 6563 8812 000	75	•
1400 x 700	780	S600 6553 8812 000	70	•
1300 x 700	680	S600 6543 8812 000	67	•

Recommended panels

(A) Shower tray length	(B) Front panel	(C) Passageway
1900	1260	640
1800	1160	640
1700	1060	640
1600	980	620
1500	880	620
1400	780	620
1300	680	620

Side panels size

Shower tray width	(D) Panel width
900	880
800	780
750	730
700	680

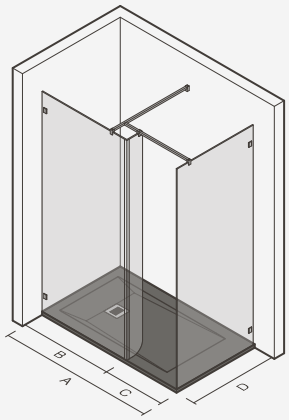

CORNER APPLICATION - Front + Side

Shower enclosures - Width 900

Shower tray size	Front panel size	Reference	Weight	€
1900 x 900	1260	S600 6603 8712 000	91	•
1800 x 900	1160	S600 6593 8712 000	86	•
1700 x 900	1060	S600 6583 8712 000	83	•
1600 x 900	980	S600 6573 8712 000	81	•
1500 x 900	880	S600 6563 8712 000	76	•
1400 x 900	780	S600 6553 8712 000	71	•
1300 x 900	680	S600 6543 8712 000	68	•

Shower enclosures - Width 800

Shower tray size	Front panel size	Reference	Weight	€
1900 x 800	1260	S600 6603 8612 000	86	•
1800 x 800	1160	S600 6593 8612 000	83	•
1700 x 800	1060	S600 6583 8612 000	78	•
1600 x 800	980	S600 6573 8612 000	76	•
1500 x 800	880	S600 6563 8612 000	71	•
1400 x 800	780	S600 6553 8612 000	66	•
1300 x 800	680	S600 6543 8612 000	63	•

Shower enclosures - Width 750

Shower tray size	Front panel size	Reference	Weight	€
1900 x 750	1260	S600 6603 8512 000	85	•
1800 x 750	1160	S600 6593 8512 000	82	•
1700 x 750	1060	S600 6583 8512 000	77	•
1600 x 750	980	S600 6573 8512 000	75	•
1500 x 750	880	S600 6563 8512 000	70	•
1400 x 750	780	S600 6553 8512 000	65	•
1300 x 750	680	S600 6543 8512 000	62	•

Shower enclosures - Width 700

Shower tray size	Front panel size	Reference	Weight	€
1900 x 700	1260	S600 6603 8412 000	83	•
1800 x 700	1160	S600 6593 8412 000	80	•
1700 x 700	1060	S600 6583 8412 000	75	•
1600 x 700	980	S600 6573 8412 000	73	•
1500 x 700	880	S600 6563 8412 000	68	•
1400 x 700	780	S600 6553 8412 000	63	•
1300 x 700	680	S600 6543 8412 000	60	•

Recommended panels

(A) Shower tray length	(B) Front panel	(C) Passageway
1900	1260	640
1800	1160	640
1700	1060	640
1600	980	620
1500	880	620
1400	780	620
1300	680	620

Side panels size

Shower tray width	(D) Panel width
900	880
800	780
750	730
700	680

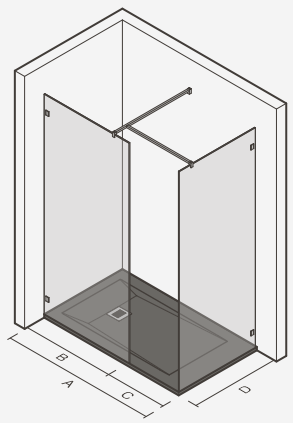

Door (partial panel)

Code	€
S101 0240 0000 000	•

CORNER APPLICATION - Front + Door

Shower enclosures - Width 900

Shower tray size	Front panel size	Reference	Weight	€
1900 x 900	1260	S600 6603 9512 000	63	•
1800 x 900	1260	S600 6603 9512 000	63	•
1700 x 900	1260	S600 6603 9512 000	63	•
1600 x 900	1260	S600 6603 9512 000	63	•
1500 x 900	1160	S600 6593 9512 000	60	•
1400 x 900	1060	S600 6583 9512 000	55	•
1300 x 900	1060	S600 6583 9512 000	55	•
1200 x 900	980	S600 6573 9512 000	53	•
1100 x 900	980	S600 6573 9512 000	53	•
1000 x 900	880	S600 6563 9512 000	48	•

Shower enclosures - Width 800

Shower tray size	Front panel size	Reference	Weight	€
1900 x 800	1260	S600 6603 9412 000	63	•
1800 x 800	1260	S600 6603 9412 000	63	•
1700 x 800	1260	S600 6603 9412 000	63	•
1600 x 800	1260	S600 6603 9412 000	63	•
1500 x 800	1160	S600 6593 9412 000	60	•
1400 x 800	1060	S600 6583 9412 000	55	•
1300 x 800	1060	S600 6583 9412 000	55	•
1200 x 800	980	S600 6573 9412 000	53	•
1100 x 800	980	S600 6573 9412 000	53	•
1000 x 800	880	S600 6563 9412 000	48	•

Shower enclosures - Width 750

Shower tray size	Front panel size	Reference	Weight	€
1900 x 750	1260	S600 6603 9312 000	63	•
1800 x 750	1260	S600 6603 9312 000	63	•
1700 x 750	1260	S600 6603 9312 000	63	•
1600 x 750	1260	S600 6603 9312 000	63	•
1500 x 750	1160	S600 6593 9312 000	60	•
1400 x 750	1060	S600 6583 9312 000	55	•
1300 x 750	1060	S600 6583 9312 000	55	•
1200 x 750	980	S600 6573 9312 000	53	•
1100 x 750	980	S600 6573 9312 000	53	•
1000 x 750	880	S600 6563 9312 000	48	•

Shower enclosures - Width 700

Shower tray size	Front panel size	Reference	Weight	€
1900 x 700	1260	S600 6603 9212 000	63	•
1800 x 700	1260	S600 6603 9212 000	63	•
1700 x 700	1260	S600 6603 9212 000	63	•
1600 x 700	1260	S600 6603 9212 000	63	•
1500 x 700	1160	S600 6593 9212 000	60	•
1400 x 700	1060	S600 6583 9212 000	55	•
1300 x 700	1060	S600 6583 9212 000	55	•
1200 x 700	980	S600 6573 9212 000	53	•
1100 x 700	980	S600 6573 9212 000	53	•
1000 x 700	880	S600 6563 9212 000	48	•

Recommended panels

(A) Shower tray length	(B) Front panel	(C) Door
1900	1260	150
1800	1260	150
1700	1260	150
1600	1260	150
1500	1160	150
1400	1060	150
1300	1060	150
1200	980	150
1100	980	150
1000	880	150

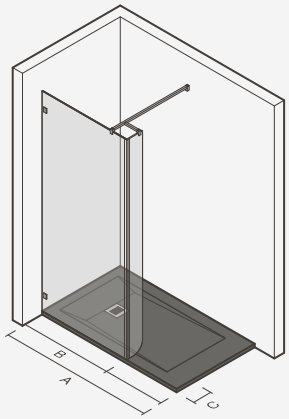

CORNER APPLICATION - Front

Shower enclosures - Width 900

Shower tray size	Front panel size	Reference	Weight	€
1900 x 900	1260	S600 6603 8312 000	56	•
1800 x 900	1260	S600 6603 8312 000	56	•
1700 x 900	1260	S600 6603 8312 000	56	•
1600 x 900	1260	S600 6603 8312 000	56	•
1500 x 900	1160	S600 6593 8312 000	53	•
1400 x 900	1060	S600 6583 8312 000	48	•
1300 x 900	1060	S600 6583 8312 000	48	•
1200 x 900	980	S600 6573 8312 000	46	•
1100 x 900	980	S600 6573 8312 000	46	•
1000 x 900	880	S600 6563 8312 000	41	•

Shower enclosures - Width 800

Shower tray size	Front panel size	Reference	Weight	€
1900 x 800	1260	S600 6603 8212 000	56	•
1800 x 800	1260	S600 6603 8212 000	56	•
1700 x 800	1260	S600 6603 8212 000	56	•
1600 x 800	1260	S600 6603 8212 000	56	•
1500 x 800	1160	S600 6593 8212 000	53	•
1400 x 800	1060	S600 6583 8212 000	48	•
1300 x 800	1060	S600 6583 8212 000	48	•
1200 x 800	980	S600 6573 8212 000	46	•
1100 x 800	980	S600 6573 8212 000	46	•
1000 x 800	880	S600 6563 8212 000	41	•

Shower enclosures - Width 750

Shower tray size	Front panel size	Reference	Weight	€
1900 x 750	1260	S600 6603 8112 000	56	•
1800 x 750	1260	S600 6603 8112 000	56	•
1700 x 750	1260	S600 6603 8112 000	56	•
1600 x 750	1260	S600 6603 8112 000	56	•
1500 x 750	1160	S600 6593 8112 000	53	•
1400 x 750	1060	S600 6583 8112 000	48	•
1300 x 750	1060	S600 6583 8112 000	48	•
1200 x 750	980	S600 6573 8112 000	46	•
1100 x 750	980	S600 6573 8112 000	46	•
1000 x 750	880	S600 6563 8112 000	41	•

Shower enclosures - Width 700

Shower tray size	Front panel size	Reference	Weight	€
1900 x 700	1260	S600 6603 8012 000	56	•
1800 x 700	1260	S600 6603 8012 000	56	•
1700 x 700	1260	S600 6603 8012 000	56	•
1600 x 700	1260	S600 6603 8012 000	56	•
1500 x 700	1160	S600 6593 8012 000	53	•
1400 x 700	1060	S600 6583 8012 000	46	•
1300 x 700	1060	S600 6583 8012 000	46	•
1200 x 700	980	S600 6573 8012 000	46	•
1100 x 700	980	S600 6573 8012 000	46	•
1000 x 700	880	S600 6563 8012 000	41	•

Recommended panels

(A) Shower tray length	(B) Front panel
1900	1260
1800	1260
1700	1260
1600	1260
1500	1160
1400	1060
1300	1060
1200	980
1100	980
1000	880

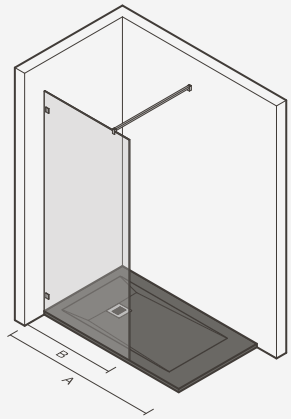

Door (partial panel)

Code	€
S101 0240 0000 000	•

BETWEEN-WALLS APPLICATION - Front + Door

Shower enclosures - Width 900

Shower tray size	Front panel size	Reference	Weight	€
1900 x 900	1260	S600 6603 9512 000	63	•
1800 x 900	1160	S600 6593 9512 000	60	•
1700 x 900	1060	S600 6583 9512 000	55	•
1600 x 900	980	S600 6573 9512 000	53	•
1500 x 900	880	S600 6563 9512 000	48	•
1400 x 900	780	S600 6553 9512 000	43	•
1300 x 900	680	S600 6543 9512 000	40	•

Shower enclosures - Width 800

Shower tray size	Front panel size	Reference	Weight	€
1900 x 800	1260	S600 6603 9412 000	63	•
1800 x 800	1160	S600 6593 9412 000	60	•
1700 x 800	1060	S600 6583 9412 000	55	•
1600 x 800	980	S600 6573 9412 000	53	•
1500 x 800	880	S600 6563 9412 000	48	•
1400 x 800	780	S600 6553 9412 000	43	•
1300 x 800	680	S600 6543 9412 000	40	•

Shower enclosures - Width 750

Shower tray size	Front panel size	Reference	Weight	€
1900 x 750	1260	S600 6603 9312 000	63	•
1800 x 750	1160	S600 6593 9312 000	60	•
1700 x 750	1060	S600 6583 9312 000	55	•
1600 x 750	980	S600 6573 9312 000	53	•
1500 x 750	880	S600 6563 9312 000	48	•
1400 x 750	780	S600 6553 9312 000	43	•
1300 x 750	680	S600 6543 9312 000	40	•

Shower enclosures - Width 700

Shower tray size	Front panel size	Reference	Weight	€
1900 x 700	1260	S600 6603 9212 000	63	•
1800 x 700	1160	S600 6593 9212 000	60	•
1700 x 700	1060	S600 6583 9212 000	55	•
1600 x 700	980	S600 6573 9212 000	53	•
1500 x 700	880	S600 6563 9212 000	48	•
1400 x 700	780	S600 6553 9212 000	43	•
1300 x 700	680	S600 6543 9212 000	40	•

Recommended panels

(A) Shower tray length	(B) Front panel	(C) Passageway
1900	1260	640
1800	1160	640
1700	1060	640
1600	980	620
1500	880	620
1400	780	620
1300	680	620

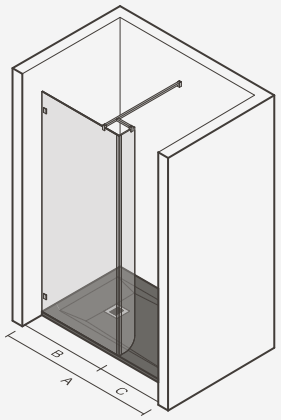

BETWEEN-WALLS APPLICATION - Front

Shower enclosures - Width 900

Shower tray size	Front panel size	Reference	Weight	€
1900 x 900	1260	S600 6603 8312 000	56	•
1800 x 900	1160	S600 6593 8312 000	53	•
1700 x 900	1060	S600 6583 8312 000	48	•
1600 x 900	980	S600 6573 8312 000	46	•
1500 x 900	880	S600 6563 8312 000	41	•
1400 x 900	780	S600 6553 8312 000	36	•
1300 x 900	680	S600 6543 8312 000	33	•

Shower enclosures - Width 800

Shower tray size	Front panel size	Reference	Weight	€
1900 x 800	1260	S600 6603 8212 000	56	•
1800 x 800	1160	S600 6593 8212 000	53	•
1700 x 800	1060	S600 6583 8212 000	48	•
1600 x 800	980	S600 6573 8212 000	46	•
1500 x 800	880	S600 6563 8212 000	41	•
1400 x 800	780	S600 6553 8212 000	36	•
1300 x 800	680	S600 6543 8212 000	33	•

Shower enclosures - Width 750

Shower tray size	Front panel size	Reference	Weight	€
1900 x 750	1260	S600 6603 8112 000	56	•
1800 x 750	1160	S600 6593 8112 000	53	•
1700 x 750	1060	S600 6583 8112 000	48	•
1600 x 750	980	S600 6573 8112 000	46	•
1500 x 750	880	S600 6563 8112 000	41	•
1400 x 750	780	S600 6553 8112 000	36	•
1300 x 750	680	S600 6543 8112 000	33	•

Shower enclosures - Width 700

Shower tray size	Front panel size	Reference	Weight	€
1900 x 700	1260	S600 6603 8012 000	56	•
1800 x 700	1160	S600 6593 8012 000	53	•
1700 x 700	1060	S600 6583 8012 000	46	•
1600 x 700	980	S600 6573 8012 000	46	•
1500 x 700	880	S600 6563 8012 000	41	•
1400 x 700	780	S600 6553 8012 000	36	•
1300 x 700	680	S600 6543 8012 000	33	•

Recommended panels

(A) Shower tray length	(B) Front panel	(C) Passageway
1900	1260	640
1800	1160	640
1700	1060	640
1600	980	620
1500	880	620
1400	780	620
1300	680	620

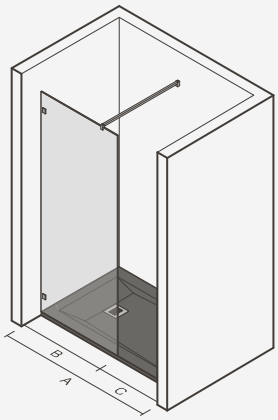

Door (partial panel)

Code	€
S101 0240 0000 000	•

Evolve



EVOLVE shower enclosure - L2E model - with ROCKS shower tray

MODELS

2L2 + 2L2
2 fixed glass panels
2 sliding glass panels

L2E + LF
2 fixed glass panels
1 sliding glass panel

2LE
1 fixed glass panel
1 sliding glass panel

APPLICATIONS
Corner
Between-walls

FORMATS
Rectangular
Square

DIMENSIONS
From 700 x 700mm up to 1800 x 900mm
1950mm heigth

MATERIALS

Profiles
Polished aluminum

Glass
Safety glass - 6mm (tempered with an anti--limescale treatment)

TECHNOLOGY

Door(s) movement
Sliding (concealed)

Door(s) fastening
Magnetic

Compensation
Yes - up to 100mm in the L2E models

Cleaning
Door-releasing system for easy cleaning

Passageway area
Equipped with chrome profile

IN THE BOX
Shower enclosure and fixing kit (screws or adesives applicable)



EVOLVE shower enclosure - L2E+LF model - with ROCKS shower tray



6mm tempered safety glass



Sliding doors (concealed guides)

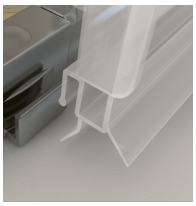

Translucid sealants



Minimalistic handles



Towel hanger

CORNER APPLICATION - 2L2 + 2L2

Shower enclosures - Width 1200

Shower tray size	Reference	Weight	€
1200 x 1200	S602 1160 0012 M00	90	•

Shower enclosures - Width 1100

Shower tray size	Reference	Weight	€
1200 x 1100	S602 1150 0012 M00	86	•
1100 x 1100	S602 1140 0012 M00	82	•

Shower enclosures - Width 1000

Shower tray size	Reference	Weight	€
1200 x 1000	S602 1130 0012 M00	83	•
1100 x 1000	S602 1120 0012 M00	79	•
1000 x 1000	S602 1110 0012 M00	76	•

Shower enclosures - Width 900

Shower tray size	Reference	Weight	€
1200 x 900	S602 1100 0012 M00	79	•
1100 x 900	S602 1090 0012 M00	75	•
1000 x 900	S602 1080 0012 M00	72	•
900 x 900	S602 1070 0012 M00	68	•

Shower enclosures - Width 850

Shower tray size	Reference	Weight	€
1200 x 850	S602 1060 0012 M00	77	•
1100 x 850	S602 1050 0012 M00	73	•
1000 x 850	S602 1040 0012 M00	70	•
900 x 850	S602 1030 0012 M00	66	•
850 x 850	S602 1020 0012 M00	64	•

Shower enclosures - Width 800

Shower tray size	Reference	Weight	€
1200 x 800	S602 1010 0012 M00	76	•
1100 x 800	S602 1000 0012 M00	72	•
1000 x 800	S602 0990 0012 M00	69	•
900 x 800	S602 0980 0012 M00	65	•
850 x 800	S602 0970 0012 M00	63	•
800 x 800	S602 0960 0012 M00	62	•

Shower enclosures - Width 750

Shower tray size	Reference	Weight	€
1200 x 750	S602 0950 0012 M00	73	•
1100 x 750	S602 0940 0012 M00	69	•
1000 x 750	S602 0930 0012 M00	66	•
900 x 750	S602 0920 0012 M00	62	•
850 x 750	S602 0910 0012 M00	60	•
800 x 750	S602 0900 0012 M00	59	•
750 x 750	S602 0890 0012 M00	56	•

Compensation capability

Panel size **2L2**	Minimum	Maximum
1200	1171	1270
1100	1071	1170
1000	971	1070
900	871	970
850	821	870
800	771	820
750	721	770
700	670	720

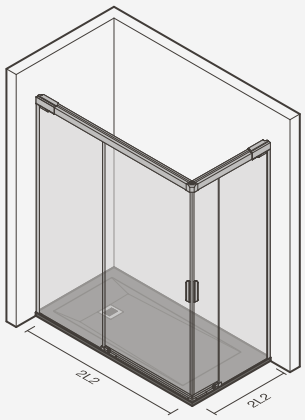

CORNER APPLICATION - 2L2 + 2L2

Shower enclosures - Width 700

Shower tray size	Reference	Weight	€
1200 x 700	S602 0880 0012 M00	71	•
1100 x 700	S602 0870 0012 M00	67	•
1000 x 700	S602 0860 0012 M00	64	•
900 x 700	S602 0850 0012 M00	60	•
850 x 700	S602 0840 0012 M00	58	•
800 x 700	S602 0830 0012 M00	57	•
750 x 700	S602 0820 0012 M00	54	•
700 x 700	S602 0810 0012 M00	52	•

Compensation capability

Panel size 2L2	Minimum	Maximum
1200	1171	1270
1100	1071	1170
1000	971	1070
900	871	970
850	821	870
800	771	820
750	721	770
700	670	720

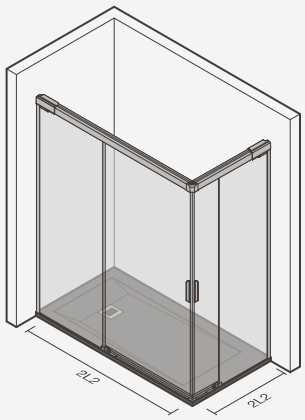



EVOLVE shower enclosure - 2L2 + 2L2 model - with ROCKS shower tray

CORNER APPLICATION - L2E + LF

Shower enclosures - Width 900

Shower tray size	Reference	Weight	€
1800 x 900	S602 1430 0012 M00	104	•
1700 x 900	S602 1420 0012 M00	100	•
1600 x 900	S602 1410 0012 M00	88	•
1500 x 900	S602 1400 0012 M00	86	•
1400 x 900	S602 1390 0012 M00	82	•
1300 x 900	S602 1380 0012 M00	79	•
1200 x 900	S602 1370 0012 M00	75	•
1100 x 900	S602 1360 0012 M00	72	•
1000 x 900	S602 1350 0012 M00	68	•

Shower enclosures - Width 800

Shower tray size	Reference	Weight	€
1800 x 800	S602 1340 0012 M00	101	•
1700 x 800	S602 1330 0012 M00	97	•
1600 X 800	S602 1320 0012 M00	85	•
1500 X 800	S602 1310 0012 M00	83	•
1400 X 800	S602 1300 0012 M00	79	•
1300 X 800	S602 1290 0012 M00	76	•
1200 X 800	S602 1280 0012 M00	72	•
1100 X 800	S602 1270 0012 M00	69	•
1000 X 800	S602 1260 0012 M00	65	•

Shower enclosures - Width 700

Shower tray size	Reference	Weight	€
1800 x 700	S602 1250 0012 M00	98	•
1700 x 700	S602 1240 0012 M00	94	•
1600 X 700	S602 1230 0012 M00	82	•
1500 X 700	S602 1220 0012 M00	80	•
1400 X 700	S602 1210 0012 M00	76	•
1300 X 700	S602 1200 0012 M00	73	•
1200 X 700	S602 1190 0012 M00	69	•
1100 X 700	S602 1180 0012 M00	66	•
1000 X 700	S602 1170 0012 M00	62	•

Compensation capability

Panel size **L2E**	Minimum	Maximum
1800	1761	1860
1700	1661	1760
1600	1573	1672
1500	1473	1572
1400	1373	1472
1300	1273	1372
1200	1173	1272
1100	1073	1172
1000	972	1072

Panel size **LF**	Minimum	Maximum
900	870	905
800	770	805
700	670	705

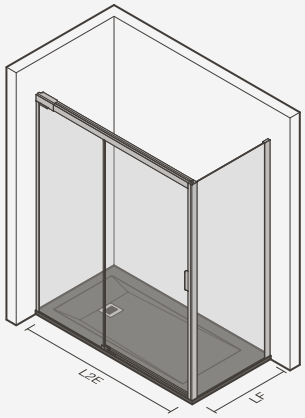

BETWEEN-WALLS APPLICATION - L2E

Shower enclosures

Shower tray length	Reference	Weight	€
1800	S602 0447 8812 M00	73	•
1700	S602 0437 8812 M00	69	•
1600	S600 9907 8812 M00	57	•
1500	S600 9787 8812 M00	55	•
1400	S600 9777 8812 M00	51	•
1300	S600 9767 8812 M00	48	•
1200	S600 9757 8812 M00	44	•
1100	S600 9737 8812 M00	41	•
1000	S600 9717 8812 M00	37	•

Compensation capability

Panel size **L2E**	Minimum	Maximum
1800	1761	1860
1700	1661	1760
1600	1561	1660
1500	1461	1560
1400	1361	1460
1300	1261	1360
1200	1161	1260
1100	1061	1160
1000	960	1060

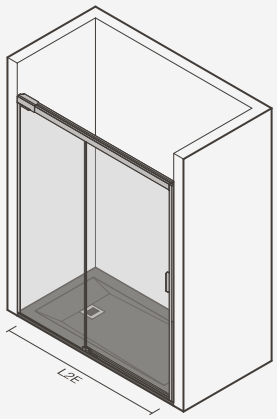



EVOLVE shower enclosure - L2E model - with ROCKS shower tray

Step Up



STEP UP shower enclosure - L4E model - with VITA shower tray and UNIC shower system

MODELS

2L2 + 2L2
2 fixed glass panels
2 sliding glass panels

24E + LF
3 fixed glass panels
2 sliding glass panels

2LE + LF
2 fixed glass panels
1 sliding glass panel

24E
2 fixed glass panels
2 sliding glass panels

2LE
1 fixed glass panel
1 sliding glass panel

MR
2 fixed glass panels
2 sliding glass panels

APPPLICATIONS

Corner
Between-walls

FORMATS

Rectangular
Square
Quadrant

DIMENSIONS

Drom 700 x 700 up to
1800 x 900mm
1950mm height

MATERIALS

Profiles
Polished aluminium

Glass
Safety glass - 6mm
(tempered with an anti-
-limescale treatment)

TECHNOLOGY

Door(s) movement
Sliding (concealed)

Door(s) fastening
Magnetic

Compensation
Yes - up to 25mm
per profile

Cleaning
Door-releasing system
for easy cleaning

Passageway area
Equipped with chrome
profile

IN THE BOX

Shower enclosure and
fixing kit (screws or
adesives applicable)



STEP UP shower enclosure - 2L2 + 2L2 model - with VITA shower tray and UNIC thermostatic shower system



6mm tempered safety glass

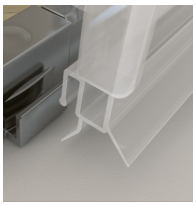

Translucid sealants



Minimalistic handles

CORNER APPLICATION - 2L2 + 2L2

Shower enclosures - Width 1400

Shower tray size	Reference	Weight	€
1400 x 1400	S602 1980 0012 M00	90	•

Shower enclosures - Width 1300

Shower tray size	Reference	Weight	€
1400 x 1300	S602 1970 0012 M00	87	•
1300 x 1300	S602 1960 0012 M00	84	•

Shower enclosures - Width 1200

Shower tray size	Reference	Weight	€
1400 x 1200	S602 1950 0012 M00	84	•
1300 x 1200	S602 1940 0012 M00	81	•
1200 x 1200	S602 1930 0012 M00	78	•

Shower enclosures - Width 1100

Shower tray size	Reference	Weight	€
1400 x 1100	S602 1920 0012 M00	81	•
1300 x 1100	S602 1910 0012 M00	78	•
1200 x 1100	S602 1900 0012 M00	75	•
1100 x 1100	S602 1890 0012 M00	72	•

Shower enclosures - Width 1000

Shower tray size	Reference	Weight	€
1400 x 1000	S602 1880 0012 M00	78	•
1300 x 1000	S602 1870 0012 M00	75	•
1200 x 1000	S602 1860 0012 M00	72	•
1100 x 1000	S602 1850 0012 M00	69	•
1000 x 1000	S602 1840 0012 M00	66	•

Shower enclosures - Width 900

Shower tray size	Reference	Weight	€
1400 x 900	S602 1830 0012 M00	75	•
1300 x 900	S602 1820 0012 M00	72	•
1200 x 900	S602 1810 0012 M00	69	•
1100 x 900	S602 1800 0012 M00	66	•
1000 x 900	S602 1790 0012 M00	63	•
900 x 900	S602 1780 0012 M00	60	•

Shower enclosures - Width 800

Shower tray size	Reference	Weight	€
1400 x 800	S602 1770 0012 M00	73	•
1300 x 800	S602 1760 0012 M00	70	•
1200 x 800	S602 1750 0012 M00	66	•
1100 x 800	S602 1740 0012 M00	63	•
1000 x 800	S602 1730 0012 M00	60	•
900 x 800	S602 1720 0012 M00	57	•
800 x 800	S602 1710 0012 M00	54	•

Compensation capability

2L2 length	Minimum	Maximum
1400	1365	1390
1300	1265	1290
1200	1165	1190
1100	1065	1090
1000	965	990
900	865	890
800	765	790
750	715	740
720	695	710
700	665	690

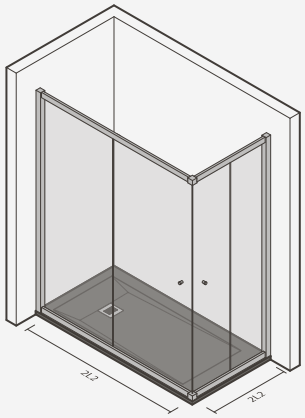

CORNER APPLICATION - 2L2 + 2L2

Shower enclosures - Width 750

Shower tray size	Reference	Weight	€
1400 x 750	S602 1700 0012 M00	70	•
1300 x 750	S602 1690 0012 M00	67	•
1200 x 750	S602 1680 0012 M00	64	•
1100 x 750	S602 1670 0012 M00	61	•
1000 x 750	S602 1660 0012 M00	58	•
900 x 750	S602 1650 0012 M00	55	•
800 x 750	S602 1640 0012 M00	52	•
750 x 750	S602 1630 0012 M00	50	•

Shower enclosures - Width 720

Shower tray size	Reference	Weight	€
1400 x 720	S602 1620 0012 M00	69	•
1300 x 720	S602 1610 0012 M00	66	•
1200 x 720	S602 1600 0012 M00	63	•
1100 x 720	S602 1590 0012 M00	60	•
1000 x 720	S602 1580 0012 M00	57	•
900 x 720	S602 1570 0012 M00	54	•
800 x 720	S602 1560 0012 M00	49	•
750 x 720	S602 1550 0012 M00	51	•
720 x 720	S602 1540 0012 M00	48	•

Shower enclosures - Width 700

Shower tray size	Reference	Weight	€
1400 x 700	S602 1530 0012 M00	68	•
1300 x 700	S602 1520 0012 M00	65	•
1200 x 700	S602 1510 0012 M00	62	•
1100 x 700	S602 1500 0012 M00	58	•
1000 x 700	S602 1490 0012 M00	56	•
900 x 700	S602 1480 0012 M00	53	•
800 x 700	S602 1470 0012 M00	48	•
750 x 700	S602 1460 0012 M00	50	•
720 x 700	S602 1450 0012 M00	47	•
700 x 700	S602 1440 0012 M00	46	•

Compensation capability

2L2 length	Minimum	Maximum
1400	1365	1390
1300	1265	1290
1200	1165	1190
1100	1065	1090
1000	965	990
900	865	890
800	765	790
750	715	740
720	695	710
700	665	690

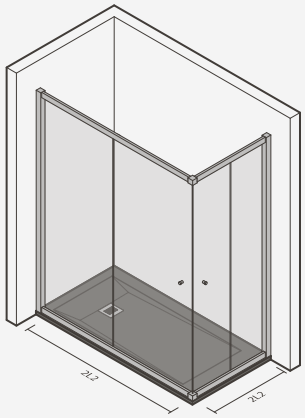

CORNER APPLICATION - L4E + LF

Shower enclosures - Width 900

Shower tray size	Reference	Weight	€
1800 x 900	S602 2280 0012 M00	94	•
1700 x 900	S602 2270 0012 M00	90	•
1600 x 900	S602 2260 0012 M00	86	•

Shower enclosures - Width 800

Shower tray size	Reference	Weight	€
1800 x 800	S602 2250 0012 M00	91	•
1700 x 800	S602 2240 0012 M00	87	•
1600 x 800	S602 2230 0012 M00	83	•

Shower enclosures - Width 700

Shower tray size	Reference	Weight	€
1800 x 700	S602 2220 0012 M00	88	•
1700 x 700	S602 2210 0012 M00	84	•
1600 x 700	S602 2200 0012 M00	80	•

Compensation capability

L4E length	Minimum	Maximum
1800	1760	1810
1700	1660	1710
1600	1560	1610

LF length	Minimum	Maximum
900	890	905
800	790	805
700	680	705

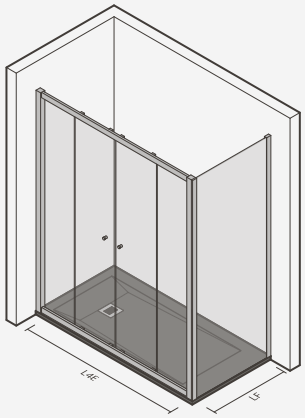

BETWEEN-WALLS APPLICATION - L4E

Shower enclosures

Shower tray length	Reference	Weight	€
1800	S602 0252 6212 M01	64	•
1700	S602 0242 6112 M01	60	•
1600	S602 0232 6012 M01	48	•

Compensation capability

L4E length	Minimum	Maximum
1800	1760	1810
1700	1660	1710
1600	1560	1610

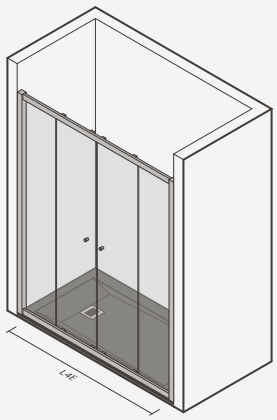

Compensation profile (+15mm)

Reference	€
S602 0320 0000 000	•



STEP UP shower enclosure - L4E + LF model - with VITA shower tray and UNIC thermostatic shower system

CORNER APPLICATION - L2E + LF

Shower enclosures - Width 900

Shower tray size	Reference	Weight	€
1600 x 900	S602 2190 0012 M00	82	•
1500 x 900	S602 2180 0012 M00	79	•
1400 x 900	S602 2170 0012 M00	75	•
1300 x 900	S602 2160 0012 M00	72	•
1200 x 900	S602 2150 0012 M00	69	•
1100 x 900	S602 2140 0012 M00	68	•
1000 x 900	S602 2130 0012 M00	66	•

Shower enclosures - Width 800

Shower tray size	Reference	Weight	€
1600 x 800	S602 2120 0012 M00	79	•
1500 x 800	S602 2110 0012 M00	76	•
1400 x 800	S602 2100 0012 M00	72	•
1300 x 800	S602 2090 0012 M00	69	•
1200 x 800	S602 2080 0012 M00	66	•
1100 x 800	S602 2070 0012 M00	65	•
1000 x 800	S602 2060 0012 M00	63	•

Shower enclosures - Width 700

Shower tray size	Reference	Weight	€
1600 x 700	S602 2050 0012 M00	76	•
1500 x 700	S602 2040 0012 M00	73	•
1400 x 700	S602 2030 0012 M00	69	•
1300 x 700	S602 2020 0012 M00	66	•
1200 x 700	S602 2010 0012 M00	63	•
1100 x 700	S602 2000 0012 M00	62	•
1000 x 700	S602 1990 0012 M00	60	•

Compensation capability

L2E length	Minimum	Maximum
1600	1560	1610
1500	1460	1510
1400	1360	1410
1300	1260	1310
1200	1160	1210
1100	1060	1110
1000	960	1010

LF length	Minimum	Maximum
900	890	905
800	790	805
700	680	705

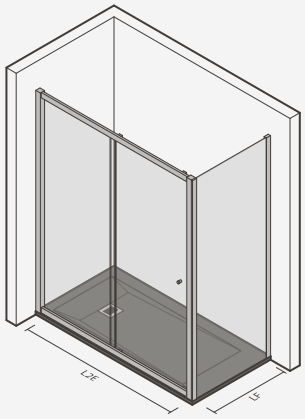

BETWEEN-WALLS APPLICATION - L2E

Shower enclosures

Shower tray length	Reference	Weight	€
1600	S602 0227 8812 M00	52	•
1500	S602 0217 8812 M00	49	•
1400	S602 0207 8812 M00	45	•
1300	S602 0197 8812 M00	42	•
1200	S602 0187 8812 M00	39	•
1100	S602 0177 8812 M00	38	•
1000	S602 0167 8812 M00	36	•

Compensation capability

L4E length	Minimum	Maximum
1600	1560	1610
1500	1460	1510
1400	1360	1410
1300	1260	1310
1200	1160	1210
1100	1060	1110
1000	960	1010

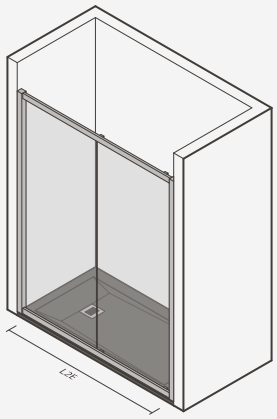

Compensation profile (+15mm)

Reference	€
S602 0320 0000 000	•



STEP UP shower enclosure - L2E + LF model - with VITA shower tray and UNIC thermostatic shower system

CORNER APPLICATION - MR

Shower enclosures

Shower tray length	Reference	Weight	€
1000 x 1000	S602 0150 5112 M00	58	•
900 x 900	S602 0140 5512 M00	52	•
800 x 800	S602 0130 5312 M00	46	•

Compensation capability

MR length	Minimum	Maximum
1000	965	990
900	865	890
800	765	790

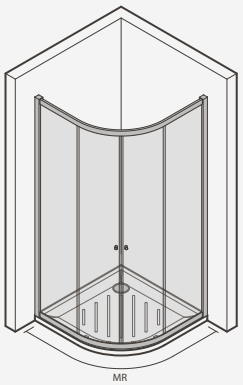



STEP UP shower enclosure - MR model - with VITA quadrant shower tray and UNIC thermostatic shower system

Step Up



STEP UP shower enclosure with 1 pivoting glass panel with CUBIC 1800 x 800 bathtub

MODELS
For bathtub

FORMATS
1 fixed glass panel + 1 pivoting glass panel
1 pivoting glass panel

MEASUREMENTS
1200mm (2 glass panels)
900mm (1 glass panel)

MATERIALS
Profiles
Polished aluminium

Glass
Safety glass - 6mm (tempered with an anti--limescale treatment)

TECHNOLOGY
Door(s) movement
Pivoting

IN THE BOX
Bathtub shower enclosure and fixing kit

1 FIXED GLASS PANEL + 1 PIVOTING GLASS PANEL - PF + PP

Bathtub enclosure

Length	Reference	Weight	€
1200	S602 0310 8112 M00	36	•

Compensation capability

PF + PP panel length	Minimum	Maximum
1200	1195	1205

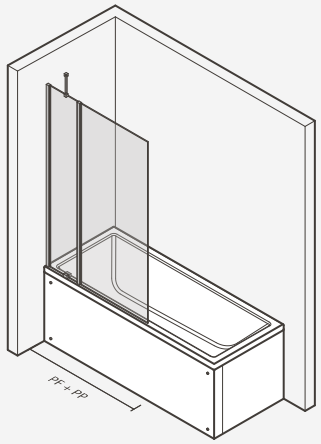

1 PIVOTING GLASS PANEL - PP

Bathtub enclosure

Length	Reference	Weight	€
900	S602 0300 8112 M00	26	•

Compensation capability

PP panel length	Minimum	Maximum
900	895	905

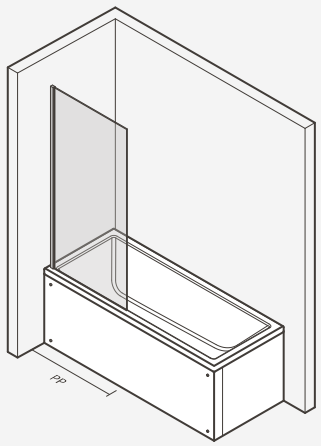





Shower

Introduction

Information 474

Hydromassage columns

Edge 478
Yn Black 480
Yn 482
Flex 484

Shower columns

Swell 486
Beat 488
Acqua 490

Shower components

Shower systems 492
N Recessed taps 498
N Overhead showers 504
N Overhead shower connectors 506
Water cascades 507
Water jets 507
N Hand showers 508
N Shower bars 509
N Shower outlets 509
N Shower hoses 510
Shower seats 510

Hydromassage cabins

Eden 512

Shower

Discover the possibilities



Well-being

The perfect shower

Attest the power of water

Water has two main powers: energizing us at the beginning of the day and relaxing us at the end of it. Nevertheless, nowadays the act of showering is much more than mere water drops falling. Discover the possibilities and elevate a simple shower to a totally new bathing experience.

Complete solution

Hydromassage columns

Experience all the benefits of water

Page 476

Nothing is more restoring and invigorating than a good shower. Learn more about the perfect balance between the power of water and a comprehensive solution.



Overhead shower

The lightness of a overhead shower´s spray helps to relax, wrapping the user in a soft and cosy rain-like effect.



Water cascade

Do not carry the weight of the world on your shoulders and relax. Enjoy the water in its most natural form – cascading over the neck and shoulders.

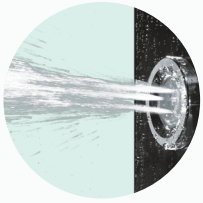

Water jets

Focused sprays that wash the stress of the day away: these massage options – rain, pulsating and spraying – for tension relief.



Thermostatic

Comfort is a must in the shower: a thermostatic mixer assures the water reaches the right temperature within seconds and stays that way.

Diversity

Shower components

Space to create

Envision the perfect shower experience and make it a reality. Choose a single lever or a thermostatic faucet with 1, 2, 3 or 4 functions and combine it with an overhead shower, a cascade, water massage jets or just a hand shower for a truly customised showering experience.

Page 498



1 Function

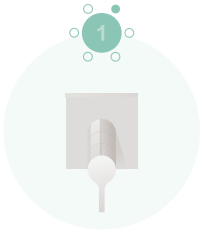

2 Functions

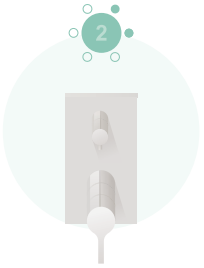

3 Functions

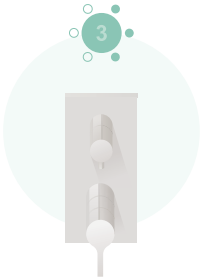

4 Functions

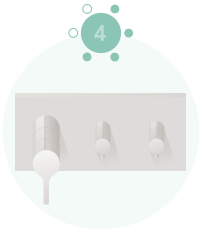

Cutting-edge wellness

Hydromassage cabins

All the comfort with zero worries

Page 512

Learn more about integrated technology and design in a single unique solution and rediscover the benefits of long forgotten rituals. Transform your bathroom in a wellness oasis.

Water massage jets

Enjoy the high-flow cascade jet or a massage that focus in the upper or lumbar area of your back (both with 64 invigorating micro jets).

Steam and aromatherapy

Experience the relaxing comfort of a steam shower (*hammam* style) and combine it with the enveloping warmth of the aromatherapy function.

Sound and light

See and hear in high definition with a 100% customizable LED lighting and immersive sound system (controlled via Eden's app).

Warranty

All of our hydromassage cabins come with 3-year warranty (for components).



Shower and hydromassage columns



SWELL shower column with VITA matte black textured shower tray and OPEN shower enclosure



Edge



EDGE *Float* hydromassage column

COLOURS
Combinations

Float

Black

DIMENSIONS
275 x 365 x 1625mm

MATERIALS
Structure
Stainless steel

Front
Tempered safety glass (6mm)

CONTROLS
Faucet
Thermostatic with a 5 function switch

TECHNOLOGY
Shower
Overhead shower
Hand shower

Hydromassage
Water cascade
6 water massage jets: rain and spraying effect

CONNECTIONS
Water network standard connection dimensions

COMPATIBILITY
Shower trays

IN THE BOX
Hydromassage column

EDGE





Hydromassage columns

275 × 365 × 1625mm

> compatible with shower tray

Float	Weight	€
S200 2523 4300 000	15	•
Black		
S200 2523 4305 600	15	•

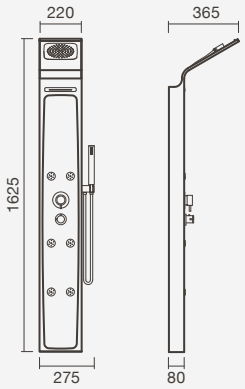



EDGE *Black* hydromassage column

Yn Black



YN Black hydromassage column

COLOURS
combinations

Float

DIMENSIONS
300 x 480 x 1480mm

MATERIALS
Structure
Stainless steel

CONTROLS
Faucet
Thermostatic with a
5 function switch

TECHNOLOGY
Shower
Overhead shower
Hand shower

Hydromassage
6 adjustable water massage
jets: pulsating effect

Bath
Lower water spout

CONNECTIONS
Water network standard
connection dimensions

COMPATIBILITY
Shower trays
and bathtubs

IN THE BOX
Hydromassage column

YN BLACK

Hydromassage column

300 × 480 × 1480mm

> compatible with shower tray and bathtub

Reference	Weight	€
S200 4803 4505 600	9	•



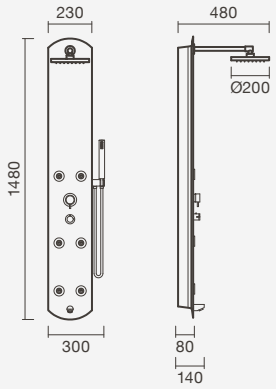

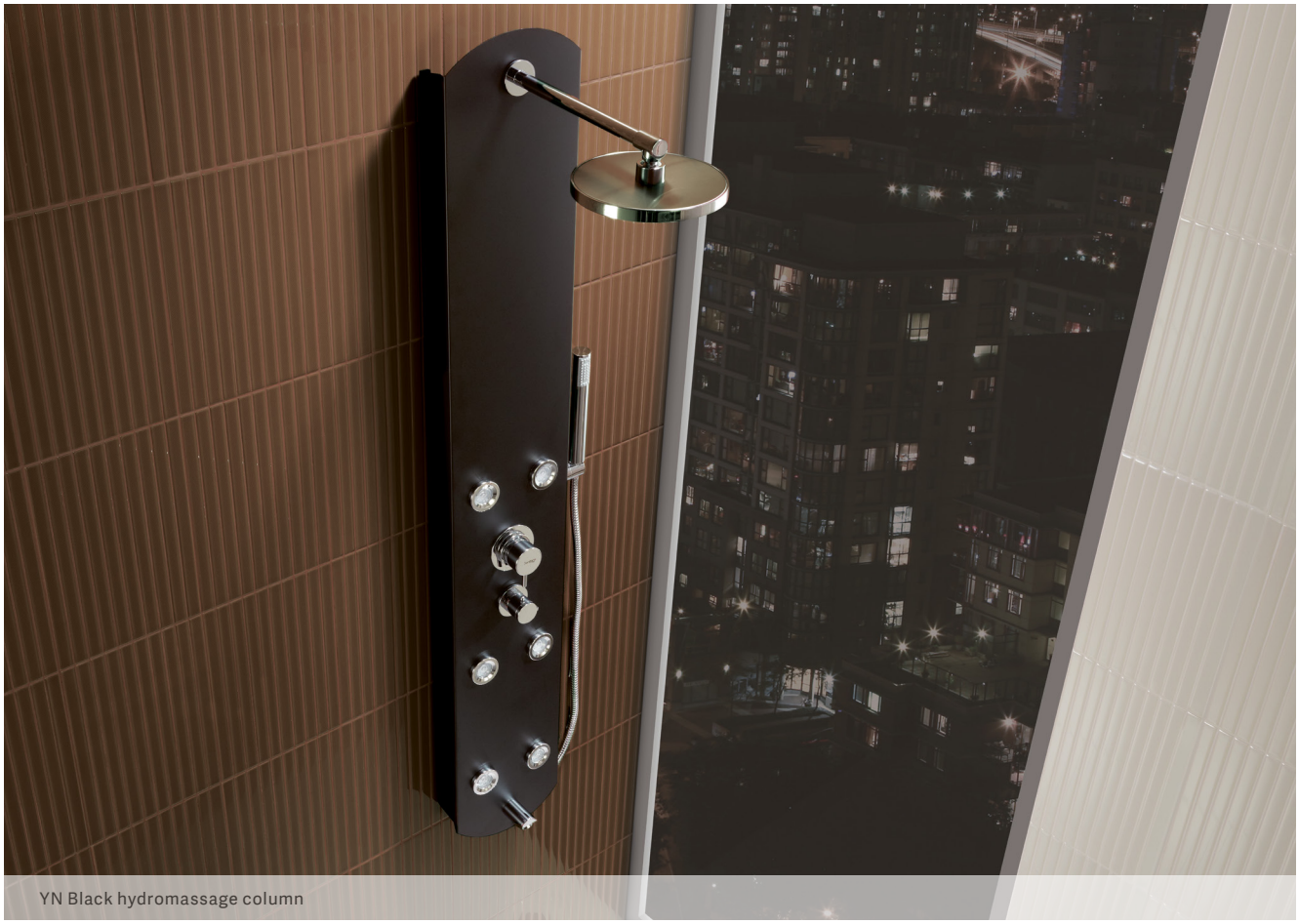

YN Black hydromassage column

Yn



YN hydromassage column

COLOURS
combinations

Silver

DIMENSIONS
300 x 480 x 1480mm

MATERIALS
Structure
Stainless steel

CONTROLS
Faucet
Thermostatic with a
5 function switch

TECHNOLOGY
Shower
Overhead shower
Hand shower

Hydromassage
6 adjustable water massage jets: pulsating effect

Bath
Lower water spout

CONNECTIONS
Water network standard connection dimensions

COMPATIBILITY
Shower trays
and bathtubs

IN THE BOX
Hydromassage column

YN

Hydromassage column

300 × 480 × 1480mm

> compatible with shower tray and bathtub

Reference	Weight	€
S200 4803 4550 700	9	•



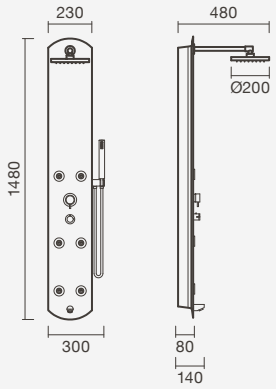



YN hydromassage column

Flex



FLEX Square hydromassage column in black

COLOURS
Combinations

Silver

Black

White

DIMENSIONS
255 x 455 x 1410mm

MATERIALS
Structure
Dibond®

CONTROLS
Faucet
Single lever with
4 function switch

TECHNOLOGY
Shower
Overhead shower
Hand shower

Hydromassage
3 adjustable water massage jets: rain, pulsating and spraying effect

CONNECTIONS
Water network standard connection dimensions

COMPATIBILITY
Shower trays

IN THE BOX
Hydromassage column

FLEX SQUARE

Hydromassage columns

255 × 455 × 1410mm

> compatible with shower tray

Silver	Weight	€
S200 2793 3845 200	6	•
Black		
S200 2793 3805 600	6	•
White		
S200 2793 3800 000	6	•



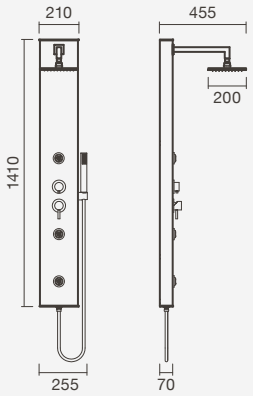

FLEX ROUND

Hydromassage columns

255 × 455 × 1410mm

> compatible with shower tray

Silver	Weight	€
S200 2793 3945 200	6	•
Black		
S200 2793 3905 600	6	•
White		
S200 2793 3900 000	6	•



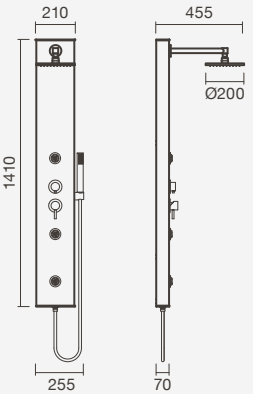

Swell



SWELL shower column

COLOURS
Combinations

Matt white - Matt black

DIMENSIONS
245 x 450 x 1485mm

MATERIALS
Structure
Solid surface
(LG's HI-MACS®)

CONTROL
Shower functions
Single lever mixer with 4 function selector

TECHNOLOGY
Shower
Overhead shower
Cervical jets (16)
Lumbar jets (16)
Handheld shower

Bath
Lower water spout

CONNECTIONS
Water network standard connection dimensions

COMPATIBILITY
Shower trays
and bathtubs

IN THE BOX
Shower column

SWELL

Shower column

245 × 450 × 1485 mm

> compatible with shower tray or bathtub

Reference	Weight	€
S202 0590 0000 000	14	•



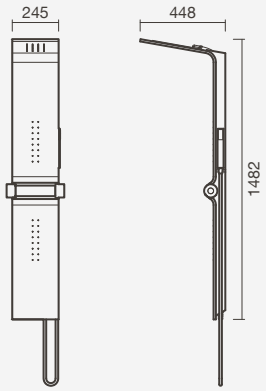



SWELL shower column's lumbar and cervical jets

Beat



BEAT shower column

COLOURS
Combinations

Matt white - Matt black

DIMENSIONS
275 x 425 x 1355mm

MATERIALS
Structure
Solid surface
(LG's HI-MACS®)

CONTROLS
Faucet
Single lever with
5 function switch

TECHNOLOGY
Shower
Overhead shower
Hand shower

Hydromassage
Water cascade
2 XL water massage jets:
rain effect

CONNECTIONS
Water network standard
connection dimensions

COMPATIBILITY
Shower trays

IN THE BOX
Shower column

BEAT

Shower column

275 × 425 × 1355mm

> compatible with shower tray

Reference	Weight	€
S200 2223 4200 000	10	•



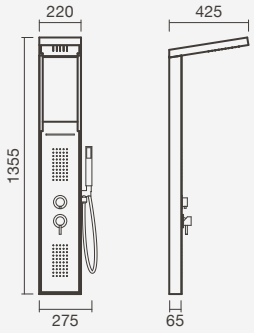



BEAT shower column's water cascade

Acqua



ACQUA shower column in black

COLOURS

White

Black

DIMENSIONS

255 x 400 x 1500mm

MATERIALS

Structure

Stainless steel

Shower and cascade

Lacquered brass

CONTROLS

Faucet

Single lever with
5 function switch

TECHNOLOGY

Shower

Overhead shower
Hand shower

Hydromassage

Water cascade
2 XL water massage jets:
rain effect

CONNECTIONS

Water network standard
connection dimensions

COMPATIBILITY

Shower trays

IN THE BOX

Shower column

ACQUA





Shower columns

255 × 400 × 1500mm

White	Weight	€
S200 2143 4100 000	11	•
Black		
S200 2143 4105 600	11	•

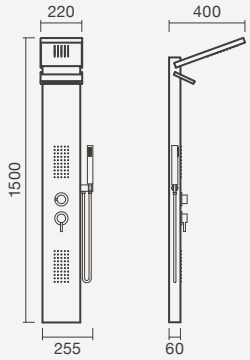



ACQUA white shower column's water cascade

Shower systems and components



BLOC telescopic shower system with thermostatic faucet and STUDIO shelf in a chrome finish

BALANCE



Thermostatic shower system

> for shower (2 functions: hand and overhead shower - angle adjustable)
> thermostatic cartridge (38º safe-stop)
> fixed shower system (non-adjustable height)
> in chromed brass
> in the box: shower system, overhead shower with Ø200mm, hand shower, 2 hand-shower supports (fixed and/or orientable and adjustable in height), 175cm shower hose and fixing kit

Reference	Weight	€
S500 0404 6050 709	6	•

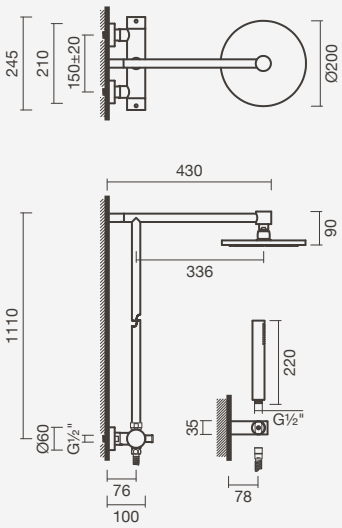

BLOC



Thermostatic shower system

> for shower (2 functions: hand and overhead shower - angle adjustable)
> thermostatic cartridge (38º safe-stop)
> telescopic shower system (adjustable height)
> in chromed brass
> in the box: shower system, overhead shower with Ø200mm, hand shower, fixed hand-shower support, 175cm shower hose and fixing kit

Reference	Weight	€
S500 0414 6299 909	5	•

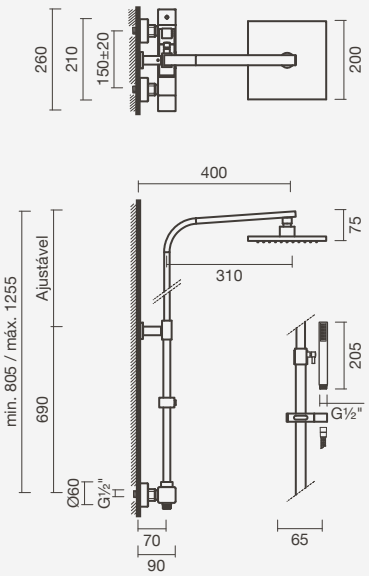

ORBIS

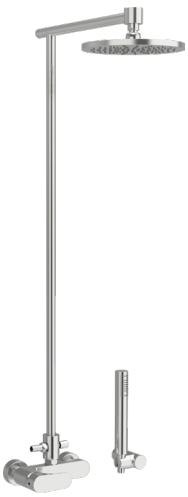

Shower system

> for showers (2 functions: hand and overhead shower - angle adjustable)
> ceramic cartridge
> fixed shower system (non-adjustable height)
> in chromed brass
> in the box: shower system, overhead shower with Ø220mm, hand shower, fixed hand-shower support, 175cm shower hose and fixing kit

Reference	Weight	€
S502 0114 5912 600	6	•

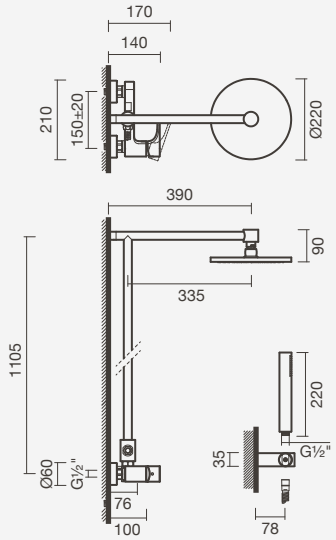

SILK



Shower system

> for shower (2 functions: hand and overhead shower - angle adjustable)
> ceramic cartridge (ecological)
> fixed shower system (non-adjustable height)
> in chromed brass
> in the box: shower system, overhead shower with Ø225mm, hand shower, fixed hand-shower support (built-in in the mixer body), 175cm shower hose and fixing kit

Reference	Weight	€
S500 0544 6150 700	5	•

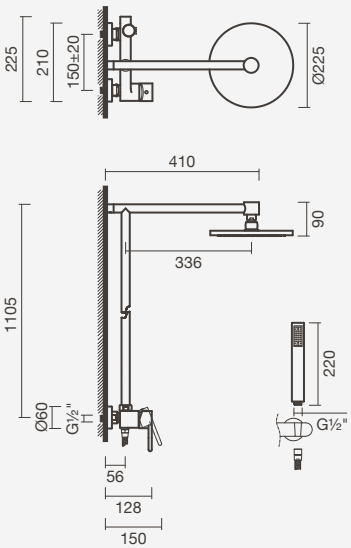

UNIC



Thermostatic shower system

> for shower (2 functions: hand and overhead shower - angle adjustable)
> thermostatic cartridge (38° safe-stop)
> fixed shower system (non-adjustable height)
> in chromed brass
> in the box: shower system, overhead shower with Ø200mm, hand shower, hand-shower support (orientable and adjustable in height), 175cm shower hose and fixing kit

Reference	Weight	€
S500 0594 5950 709	4	•

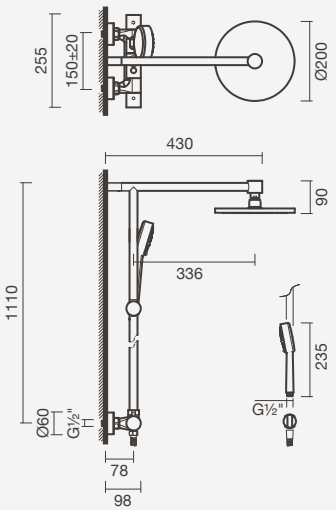



BALANCE shower system with thermostatic faucet



BLOOM height adjustable shower system with thermostatic faucet and TWIG shower basket in matte black

BLOOM



Thermostatic shower system

> for shower (2 functions: hand and overhead shower - angle adjustable)
> thermostatic cartridge (38º safe-stop)
> telescopic shower system (adjustable height)
> brass
> in the box: shower system, overhead shower with Ø225mm, hand shower, hand-shower support (orientable and adjustable in height), 175cm shower hose and fixing kit

Chrome plated	Weight	€
S502 0734 6312 600	6	•
Matte black plated		
S502 0734 6371 600	6	•

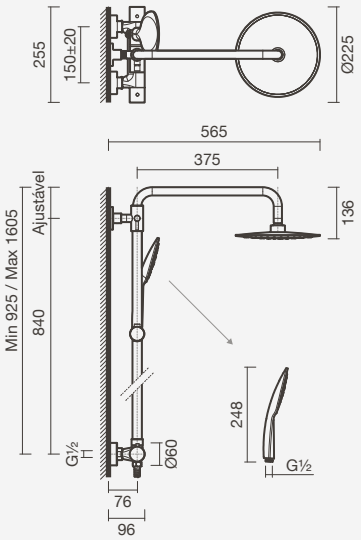

BLOOM



Shower system

> for shower (2 functions: hand and overhead shower - angle adjustable)
> ceramic cartridge
> telescopic shower system (adjustable height)
> brass
> in the box: shower system, overhead shower with Ø225mm, hand shower, hand-shower support (orientable and adjustable in height), 175cm shower hose and fixing kit

Chrome plated	Weight	€
S502 0744 6312 600	6	•
Matte black plated		
S502 0744 6371 600	6	•

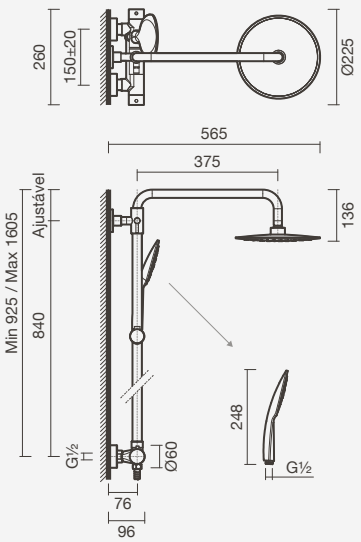

THERMOSTATIC FAUCETS

Thermostatic shower/bath faucets (1 function)

> for shower or bath (1 function)
> thermostatic cartridge (38° *safe*-stop)
> adjustable installation depth (depending on which model)
> in the box: faucet



SILK - Square rosette	Weight	€
S500 0546 9850 706	2	•
SILK - Round rosette		
S500 0546 9050 706	2	•
UNIC - Square rosette		
S500 0596 9850 706	2	•
UNIC - Round rosette		
S500 0596 9050 706	2	•



For more information about these models please consult the faucet collections chapter

Thermostatic shower/bath faucets (2 functions)

> for shower and/or bath (2 functions)
> thermostatic cartridge (38° *safe*-stop)
> adjustable installation depth (depending on which model)
> in the box: faucet



BALANCE - Rectangular rosette (vertical)	Weight	€
S500 0406 9950 700	2	•
BALANCE - Round rosette		
S500 0406 9150 700	2	•
SILK - Rectangular rosette (vertical)		
S500 0546 9950 706	2	•
SILK - Round rosette		
S500 0546 9150 706	2	•
UNIC - Rectangular rosette (vertical)		
S500 0596 9950 706	2	•
UNIC - Round rosette		
S500 0596 9150 706	2	•



For more information about these models please consult the faucet collections chapter

THERMOSTATIC FAUCETS

Thermostatic shower/bath faucets (3 functions)

> for shower and/or bath (3 functions)
> thermostatic cartridge (38° *safe-stop*)
> adjustable installation depth (depending on which model)
> in the box: faucet



BLOOM - Round rosettes	Weight	€
S502 0696 9212 602	3	•
BALANCE - Rectangular rosette (vertical)		
S500 0407 0050 700	2	•
BALANCE - Round rosettes		
S500 0406 9250 700	2	•
SILK - Rectangular rosette (vertical)		
S500 0547 0050 706	2	•
SILK - Round rosettes		
S500 0546 9250 706	2	•
UNIC -Rectangular rosette (vertical)		
S500 0597 0050 706	2	•
UNIC - Round rosettes		
S500 0596 9250 706	2	•



For more information about these models please consult the faucet collections chapter

Thermostatic shower/bath faucets (4 functions)

> for shower and/or bath (4 functions)
> thermostatic cartridge (38° *safe-stop*)
> adjustable installation depth (depending on which model)
> in the box: faucet



BALANCE - Rectangular rosette (vertical)	Weight	€
S500 0407 0150 700	3	•
BALANCE - Round rosettes		
S500 0406 9350 700	3	•
SILK - Rectangular rosette (vertical)		
S500 0547 0150 706	3	•
SILK - Round rosettes		
S500 0546 9350 706	3	•
UNIC - Rectangular rosette (vertical)		
S500 0597 0150 706	3	•
UNIC - Round rosettes		
S500 0596 9350 706	3	•



For more information about these models please consult the faucet collections chapter

SINGLE LEVER FAUCETS



Single lever shower/bath faucets (1 function)

> for shower or bath (1 function)
> ceramic cartridge
> adjustable installation depth (depending on which model)
> in the box: faucet

	Weight	€
BALANCE - Square rosette		
S500 0406 9450 700	1	•
BALANCE - Round rosette		
S500 0406 8650 700	1	•
ORBIS - Square rosette		
S502 0136 9412 600	1	•
ORBIS - Round rosette		
S502 0126 8612 600	1	•
NORM - Rectangular rosette (with *smartbox*)		
S502 0956 9412 601	1	•
NORM - Rectangular rosette		
S502 0956 9412 600	1	•
SILK - Square rosette		
S500 0546 9450 706	1	•
SILK - Round rosette		
S500 0546 8650 706	1	•
LOOP - Rectangular rosette (with *smartbox*)		
S502 0946 9412 601	1	•
LOOP - Rectangular rosette		
S502 0946 9412 600	1	•
PRIM - Rectangular rosette (with *smartbox*)		
S502 0936 9412 601	1	•
PRIM - Rectangular rosette		
S502 0936 9412 600	1	•
UNIC - Square rosette		
S500 0596 9450 706	1	•
UNIC - Round rosette		
S500 0596 8650 706	1	•
BLOOM - Round rosette - matte black finish		
S502 0426 8671 600	1	•
BLOOM - Round rosette		
S502 0426 8612 600	1	•
SCOPE - Round rosette		
S502 1256 8612 600	1	•



For more information about these models please consult the faucet collections chapter

SINGLE LEVER FAUCETS

Single lever shower/bath faucets (2 functions)

> for shower and/or bath (2 functions)
> ceramic cartridge
> adjustable installation depth (depending on which model)
> in the box: faucet



	Weight	€
BALANCE - Rectangular rosette (vertical)		
S500 0406 9550 700	2	•
BALANCE - Round rosette		
S500 0406 8750 700	2	•
ORBIS - Rectangular rosette (vertical)		
S502 0156 9512 600	2	•
ORBIS - Round rosette		
S502 0146 8712 600	2	•
NORM - Rectangular rosette (with *smartbox*)		
S502 0956 9512 601	2	•
NORM - Rectangular rosette		
S502 0956 9512 600	2	•
SILK - Rectangular rosette (vertical)		
S500 0546 9550 706	2	•
SILK - Round rosette		
S500 0546 8750 706	2	•
LOOP - Rectangular rosette (with *smartbox*)		
S502 0946 9512 601	2	•
LOOP - Rectangular rosette		
S502 0946 9512 600	2	•
PRIM - Rectangular rosette (with *smartbox*)		
S502 0936 9512 601	2	•
PRIM - Rectangular rosette		
S502 0936 9512 600	2	•
UNIC - Round rosette		
S500 0596 8750 706	2	•
N **BLOOM - Round rosette - matte black finish**		
S502 0426 8771 600	1	•
BLOOM - Round rosette		
S502 0426 8712 600	2	•
N **SCOPE - Round rosette**		
S502 1256 8712 600	1	•



For more information about these models please consult the faucet collections chapter



BLOOM single lever faucet (2 functions) with round hand shower

SINGLE LEVER FAUCETS

Single lever shower/bath faucets (3 functions)

> for shower and/or bath (3 functions)
> ceramic cartridge
> adjustable installation depth (depending on which model)
> in the box: faucet



BALANCE -Rectangular rosette (vertical)	Weight	€
S500 0406 9650 700	2	•
BALANCE - Round rosettes		
S500 0406 8850 700	2	•
SILK - Rectangular rosette (vertical)		
S500 0546 9650 706	2	•
SILK - Round rosettes		
S500 0546 8850 706	2	•
UNIC - Rectangular rosette (vertical)		
S500 0596 9650 706	2	•
UNIC - Round rosettes		
S500 0596 8850 706	2	•



For more information about these models please consult the faucet collections chapter

Single lever shower/bath faucets (4 functions)

> for shower and/or bath (4 functions)
> ceramic cartridge
> adjustable installation depth (depending on which model)
> in the box: faucet



BALANCE - Rectangular rosette (vertical)	Weight	€
S500 0406 9750 700	3	•
BALANCE - Round rosettes		
S500 0406 8950 700	3	•
SILK - Rectangular rosette (vertical)		
S500 0546 9750 706	3	•
SILK - Round rosettes		
S500 0546 8950 706	3	•
UNIC - Rectangular rosette (vertical)		
S500 0596 9750 706	3	•
UNIC - Round rosettes		
S500 0596 8950 706	3	•



For more information about these models please consult the faucet collections chapter

TOP XL OVERHEAD SHOWERS

Overhead shower (2 functions)

> wall-mounted application
> in chrome plated ABS
> 2 function shower: overhead shower and water cascade
> in the box: overhead shower

Reference	Weight	€
S500 9435 6950 700	6	•



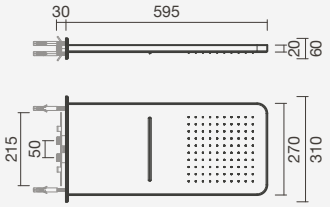



TOP XL overhead shower with 2 functions

SLIM OVERHEAD SHOWERS



Overhead showers

> wall-mounted application
> in stainless steel (AISI 304)
> in the box: overhead shower

Square - 300 - glossy finish	Weight	€
S500 9255 5650 700	2	•
Square - 300 - matte black finish		
S500 9255 5671 600	2	•
Round - 300 - glossy finish		
S500 9275 4650 700	2	•
Round - 300 - matte black finish		
S500 9275 4671 600	2	•

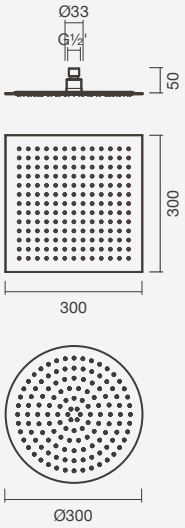

STANDARD OVERHEAD SHOWERS



Overhead showers

> wall-mounted application
> in the box: overhead shower

Square - 200 - chromed ABS	Weight	€
S101 0440 0000 000	1	•
Round - 200 - chromed ABS		
S101 0450 0000 000	2	•

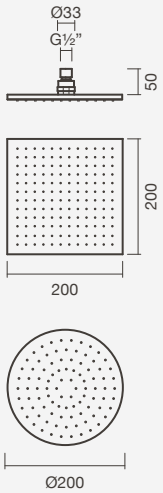

ANTI-VANDALISM OVERHEAD SHOWERS



Anti-vandalism overhead shower

> wall-mounted application
> in chrome plated brass
> in the box: overhead shower

Reference	Weight	€
S500 8994 1450 700	1	•

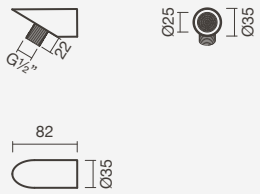

SHOWER CONNECTORS



Overhead shower ceiling connectors

> ceiling application
> in brass
> in the box: ceiling connector

Square - chrome finish	Weight	€
S500 8904 5350 700	1	•
Square - matte black finish		
S500 8904 5371 600	1	•
Round - chrome finish		
S500 8921 5950 700	1	•
Round - matte black finish		
S500 8921 5971 600	1	•

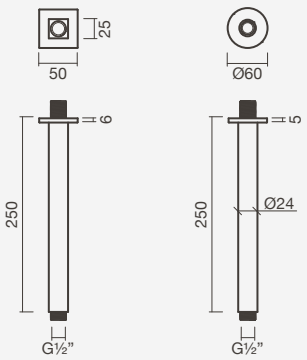



Overhead shower wall connectors

> wall-mounted application
> in brass
> in the box: wall connector

Square - 375 - chrome finish	Weight	€
S500 8854 5150 700	2	•
Square - 375 - matte black finish		
S500 8854 5171 600	2	•
Round - 375 - chrome finish		
S500 8881 4350 700	2	•
Round - 375 - matte black finish		
S500 8881 4371 600	2	•

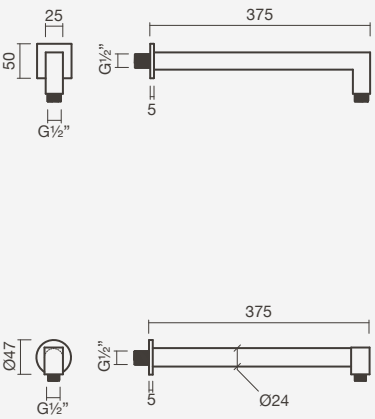

WATER CASCADES



Water cascade

> wall-mounted application
> in chrome plated brass
> in the box: water cascade

Reference	Weight	€
S500 9124 0599 900	1	•

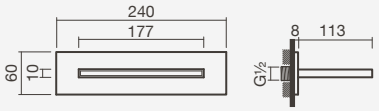

JETS





Adjustable wall-mounted water jets

> wall-mounted application
> in chrome plated brass
> it is not recommended to use more than 4 jets at the same time
> in the box: water jet

Square	Peso	€
S500 9444 1150 700	1	•
Round		
S500 9474 1050 700	1	•

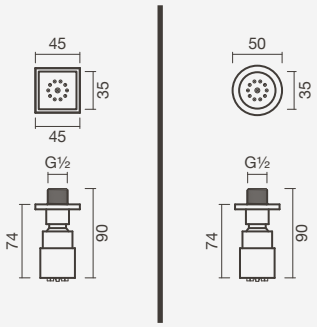



Slim 300 overhead shower with UNIC single lever shower faucet (2 functions) and square hand shower in matte black finish

HAND SHOWERS



XL hand showers

> compatible with shower holders and shower bars with shower holders
> in chrome plated ABS
> in the box: hand shower

5 Functions	Weight	€
S500 9111 5850 700	1	•
1 Function		
S500 9101 5750 700	1	•

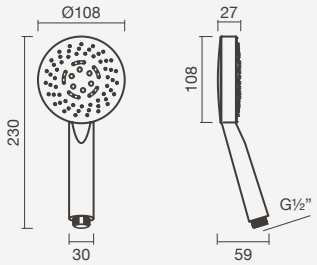

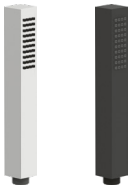



Hand shower (1 function)

> compatible with shower holders and shower bars with shower holders
> in the box: hand shower

Square - chrome plated brass	Weight	€
S500 9064 5850 700	1	•
Square - chrome plated abs		
S502 1320 0012 600	1	•
Square - matte black plated abs		
S502 1320 0071 600	1	•
Round - chrome plated brass		
S500 9071 5450 700	1	•
Round - chrome plated abs		
S502 1340 0012 600	1	•
Round - matte black plated abs		
S502 1340 0071 600	1	•

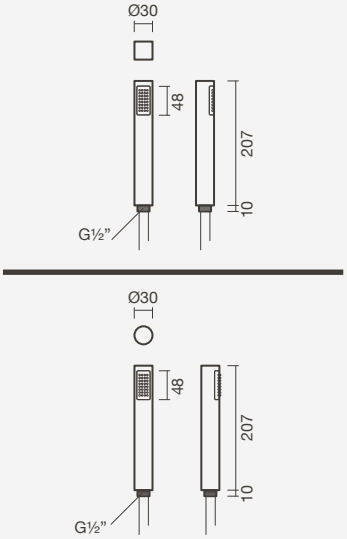



BLOOM single lever shower faucet (2 functions) and round hand shower in matte black finish

SHOWER BARS



Shower bars with wall outlet

> with water connection
> in chrome plated brass
> with sliding shower holder
> in the box: shower bar

Square	Weight	€
S500 8794 4950 700	1	•
Round		
S500 8811 5050 700	1	•

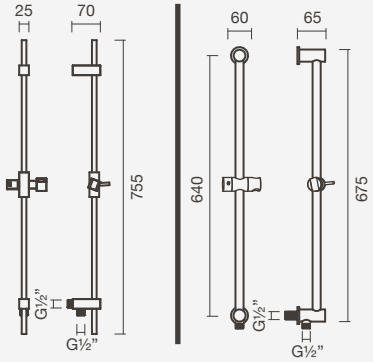



Shower bars

> without water connection
> in chrome plated brass
> with sliding shower holder
> in the box: shower bar

Square	Weight	€
S500 8804 5050 700	1	•
Round		
N S500 8821 5112 601	1	•

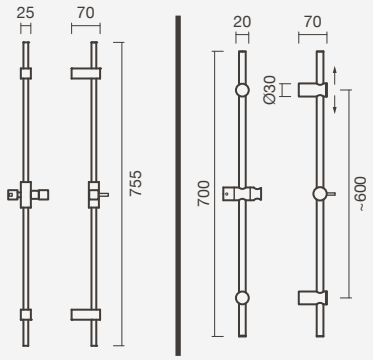

HAND SHOWER HOLDERS









Hand shower holders with wall outlet

> wall-mounted application
> in brass
> in the box: hand shower holder with wall outlet

Square - chrome plated brass	Weight	€
N S502 1400 0012 600	1	•
Square - matte black plated brass		
N S502 1400 0071 600	1	•
Round - chrome plated brass		
N S502 1311 5012 600	1	•
Round - matte black plated brass		
N S502 1311 5071 600	1	•

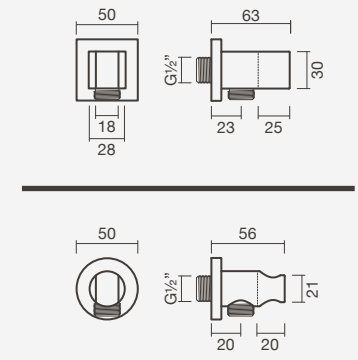

SHOWER HOSES







170cm shower hoses

> compatible with hand showers
> in the box: shower hose

Metal - glossy finish	Wright	€
S101 0470 0000 000	1	•
Pvc - glossy finish		
S502 1300 0012 600	1	•
Pvc - matte black finish		
S502 1300 0071 600	1	•

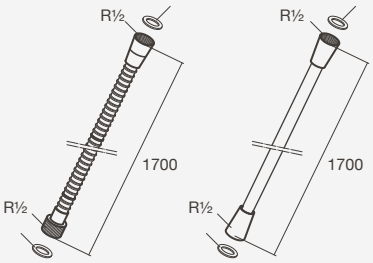

SHOWER SEATS





Folding shower seat

> wall-mounted application
> in stainless steel (AISI 304) with brushed finish
> in the box: folding seat and fixing kit

Reference	Weight	€
S900 1792 7401 100	5	•

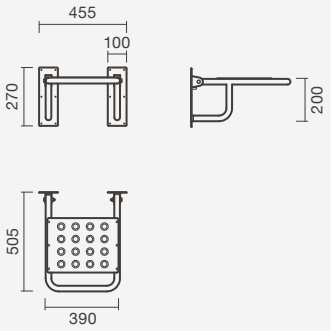

Folding shower seats

> wall-mounted application
> in stainless steel and polyurethane
> in the box: folding seat and fixing kit

Black	Weight	€
S900 1862 7505 600	5	•
White		
S900 1862 7500 000	5	•

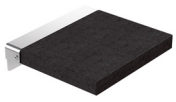



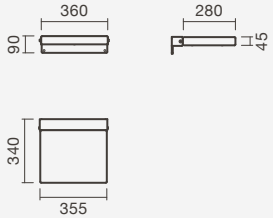



BLOOM single lever shower mixer (2 functions) with *slim* 300 overhead shower and round hand shower in chrome finish

Shower and sauna cabins



EDEN shower cabin and sauna, with door on the right and frosted posterior glass panel and overhead shower in operation



Eden



EDEN shower cabin and sauna, with door on the right and with steam function in operation

DIMENSIONS
1200 x 800 x 2200mm

MATERIALS
Panels
Solid surface
(LG's HI-MACS®)

Glass
8mm - tempered
(safety glass)

CONTROLS
Accessibility
Pivoting door

Shower functions
Thermostatic mixer with
5 function selector

Sauna, colours and multimedia
Remote control that connects to cabin via Bluetooth

TECHNOLOGY
Shower and hydromassage
Overhead shower
(150 micro jets)
High flow cascade
Cervical massage
(64 micro jets)
Lumbar massage
(64 micro jets)
Handshower

Other well-being features
Steam shower (hamman)
Immersive sound system
LED lighting
Chromotherapy

WARRANTY
3-years for components

IN THE BOX
Shower and sauna cabin

EDEN 1200 X 800 - LEFT

Shower and sauna cabin - with door on the left

> freestanding application
> in the box: shower cabin

With clear posterior glass panel	Weight	€
S202 0650 0000 001	240	•
With frosted posterior glass panel		
S202 0650 0000 000	240	•



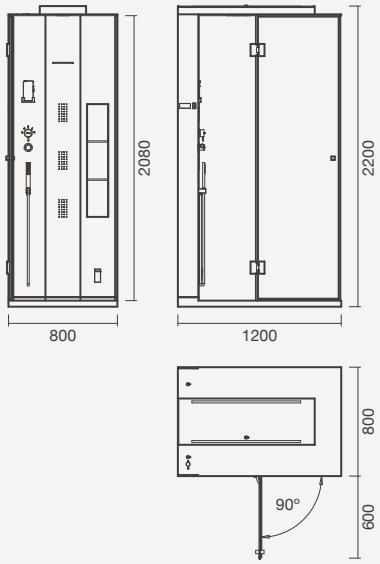

EDEN 1200 X 800 - RIGHT

Shower and sauna cabin - with door on the right

> freestanding application
> in the box: shower cabin

With clear posterior glass panel	Weight	€
S202 0670 0000 001	240	•
With frosted posterior glass panel		
S202 0670 0000 000	240	•



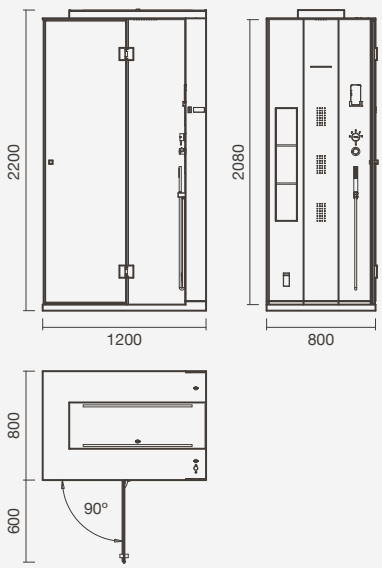

PRE-INSTALLATION - DISTANCES TO GUARANTEE IN PRE-INSTALLATION

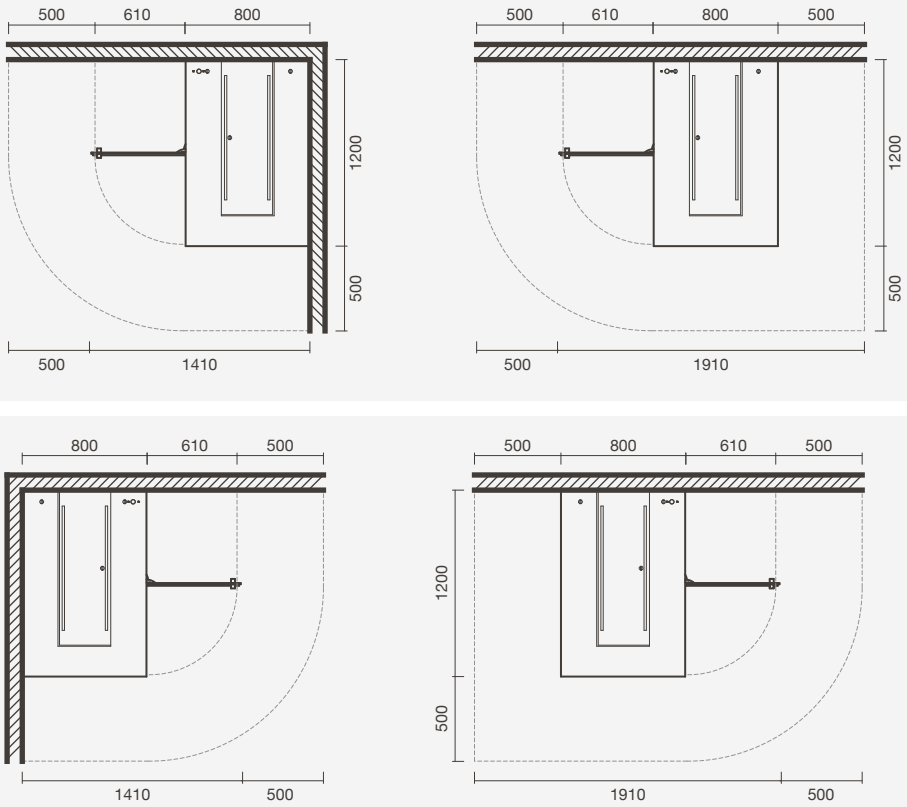

PRE-INSTALLATION - QUOTAS OF ELECTRICITY, WATER AND DRAINAGE POINTS

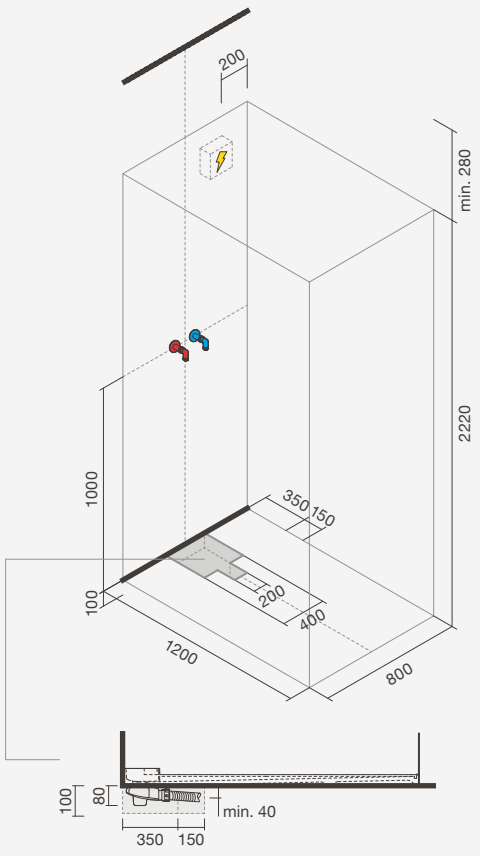

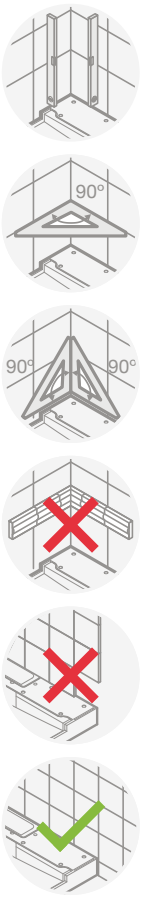



EDEN shower cabin and sauna, with door on the right and overhead shower and steam function in operation



Overhead shower detail



Water cascade detail

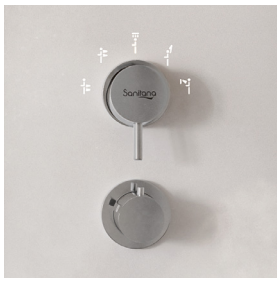

Detail of the control of shower functions



Detail of the micro jets



Control of sauna, chromotherapy and multimedia functions





Bathtubs

Introduction

Information	520
Collection guide	522

Solid surface bathtubs

Aman	526

Acrylic bathtubs

Zaha	528
Patricia	530
Quattro	532
Vita	534
Raquel	538
Plaza	540
Cubic	542
Rosario	546
Carolina	548
Nex	550
Helena	554
Sara	556
Nex Corner	558
Fatima	560
Isabel	562
Margarida	564
Area	566
Claudia	568
Rute	570
Trevo	572
Oasis	574

Add-ons

Wood panels	576
Accessories	578

Enamelled steel bathtubs

Queen	580
Hotel	582
Europa	584
Europa Infantil	586

Bathtubs

Find the perfect bathtub

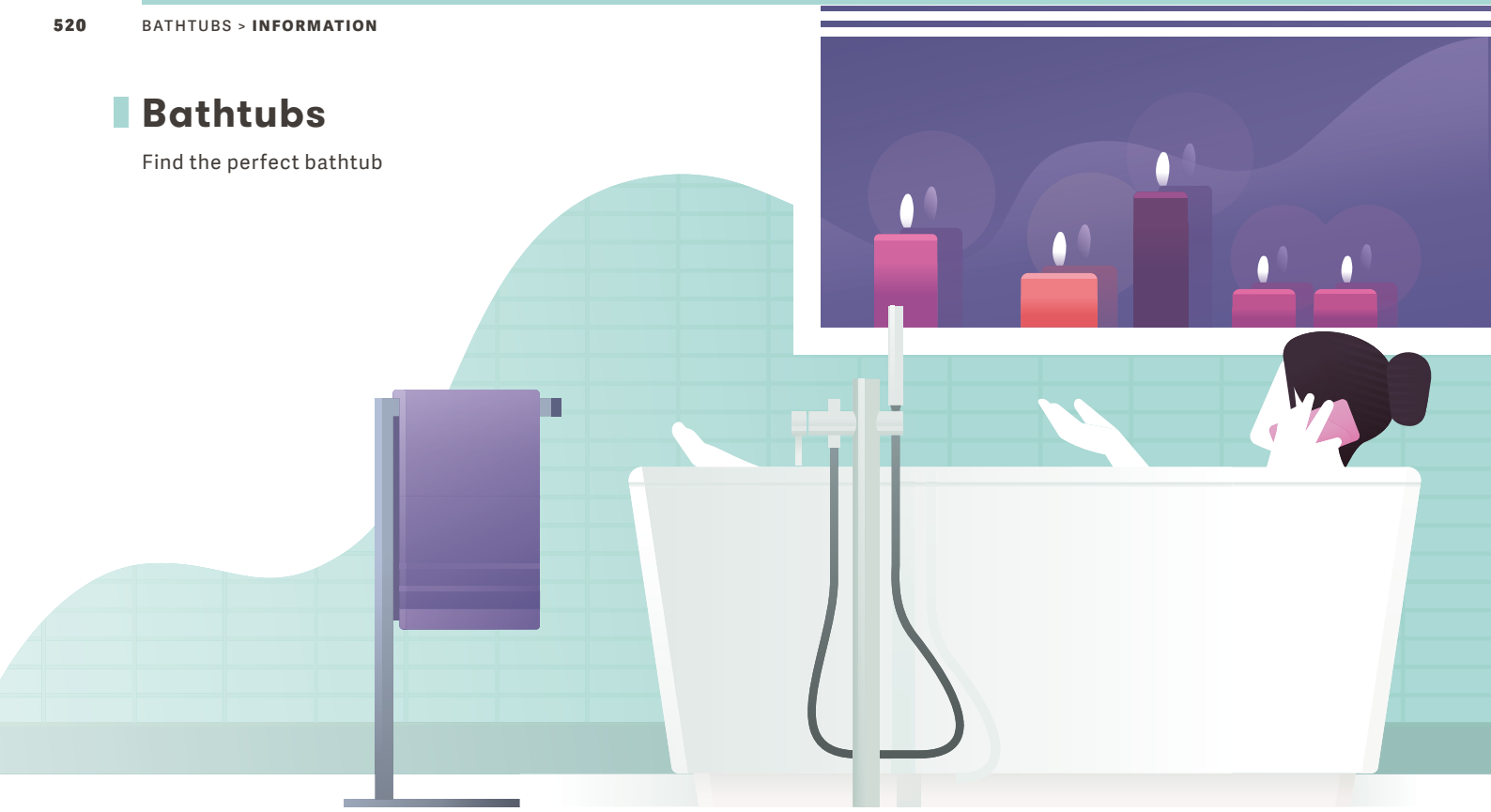

Bathtubs

Well-being

Learn more about the possibilities

Is there anything more relaxing than immersing ourselves in a warm bath after a long stressful day? Create a wellness oasis with bathtubs made from high-quality materials and designed for every style and budget.

Bathtubs

Materials

Find the most suitable



Solid surface

Page 526

Solid surface is a high-quality composite material with a matte, soft and warm to the touch texture, similar to natural stone. It is composed by a mixture of natural minerals with polyester resin. Standing out for its durability and versatility.



Acrylic

Page 528

There are several reasons why acrylic is the market´s favourite material: it is comfortable, has a low maintenance, it is light and above all, affordable. These bathtubs are thermoformed by using acrylic sheets and rare then reinforced with fibre glass in order to grant greater durability.



Enamelled Steel

Page 580

Enamelled steel bathtubs are one of the most durable and affordable solutions. These bathtubs are thermoformed from steel sheets which are then coated with enamel. They stand out for their hygienic surface, which is particularly resistant to corrosion and abrasion.

Bathtubs

Hydromassage

Explore the benefits

Discover the serene comfort of a customised wellness oasis with one of our hydromassage systems and elevate the bathing experience to next level.

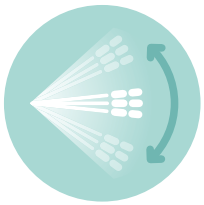

Water jets

The soft and invigorating water massage promotes well-being.

Air jets

Air bubbles arise from the bottom so you can float and relax.

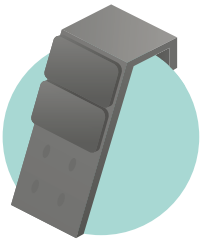

Head rest

The ergonomic headrest supports the neck during the bath.

Hydromassage systems

Know about them in detail

	HID Digital	HID Dorsal	Multijet Digital	Multijet Dorsal
HYDROMASSAGE > Water jets				
Orientable *(sides)*	4	4	4	4
Orientable *(feet)*	2	2	2	2
Dorsal		4 - 6		4 - 6
HYDROMASSAGE > Air jets (bottom)			8	8
COMFORT > Headrest		•		•
SECURITY > Water level sensor	•	•	•	•
CONTROL > Digital button ON / OFF	•	•	•	•



Quality

Safety

To ensure safe running, all the hydromassage bathtubs are subject to rigorous quality tests. This is why all of our bathtubs come with a 3 year warranty (for components).

Collection guide

Discover our range of bathtubs

LENGTH	Aman Solid surface Page 526	Zaha Acrylic Page 528	Patricia Acrylic Page 530	Quattro Acrylic Page 532	Vita Acrylic Page 534	Raquel Acrylic Page 538	Plaza Acrylic Page 540
1900					1900 x 900		
1850			1850 x 1050				
1800	1800 x 800	1800 x 800		1800 x 1000	1800 x 900 1800 x 800	1800 x 900	1800 x 800
1700		1700 x 750					1700 x 800
1600							
1500							
1450							
1400							
1300							
1200							
1050							

LENGTH

	 **Cubic** Acrylic Page 542	 **Rosario** Acrylic Page 546	 **Carolina** Acrylic Page 548	 **Nex** Acrylic Page 550	 **Helena** Acrylic Page 554	 **Sara** Acrylic Page 556
1900						
1850						
1800	1800 x 800	1800 x 800				1800 x 900
1700	1700 x 800 1700 x 750 1700 x 700		1700 x 800	1700 x 800 1700 x 750 1700 x 700	1700 x 750 1700 x 700	
1600	1600 x 800 1600 x 750 1600 x 700			1600 x 700	1600 x 750 1600 x 700	
1500	1500 x 700			1500 x 750	1500 x 700	
1450						
1400	1400 x 700					
1300						
1200						
1050						

Collection guide

Discover our range of bathtubs



Nex Corner
Acrylic
Page 558



Fatima
Acrylic
Page 560



Isabel
Acrylic
Page 562



Margarida
Acrylic
Page 564



Area
Acrylic
Page 566



Claudia
Acrylic
Page 568

LENGTH

1800						
1700						
1600	1600 x 1000					
1500		1500 x 1000	1500 x 1500			
1450				1450 x 1450		
1400					1400 x 1400	1400 x 1400
1370						
1350						
1300						
1200						
1050						



Rute
Acrylic

Page 570



Trevo
Acrylic

Page 572



Oasis
Acrylic

Page 574



Queen
Enamelled steel

Page 580



Hotel
Enamelled steel

Page 582



Europa
Enamelled steel

Page 584

LENGTH

1800				1800 x 800		
1700					1700 x 750	1700 x 700
1600					1600 x 750	1600 x 700
1500					1500 x 750	1500 x 700
1450						
1400					1400 x 750	1400 x 700
1370	1370 x 1370					
1350		1350 x 1350				
1300			1300 x 1300			1300 x 700
1200						1200 x 700
1050						1050 x 700

Aman

COLOURS

White

DIMENSIONS AND CAPACITY

1800 x 800 - 368 litres

MATERIAL

Solid surface

AMAN 1800 x 800 *freestanding* solid surface bathtub with dark gray exterior and BALANCE floor-mounted faucet







1800 x 800

Bathtubs	Reference	Weight	P.P.*	€
Bathtub > freestanding > outlet waste valve included				
White	S202 0170 0000 000	130	1	•
Light gray	S202 0170 0091 000	130	1	•
Dark gray	S202 0170 0090 900	130	1	•

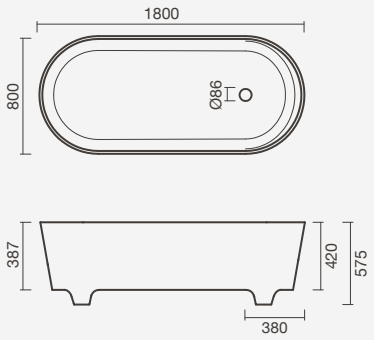



AMAN 1800 x 800 *freestanding* solid surface bathtub with light gray exterior and BALANCE floor-mounted faucet

Zaha



COLOURS

White

DIMENSIONS AND CAPACITY

1800 x 800 - 247 litres
1700 x 750 - 213 litres

MATERIAL

Acrylic

ZAHA 1800 x 800 *freestanding* acrylic bathtub with BALANCE floor-mounted faucet



1800 x 800

Bathtubs	Reference	Weight	P.P.*	€
Bathtub > freestanding > outlet waste valve included				
	S202 0190 0000 000	80	1	•

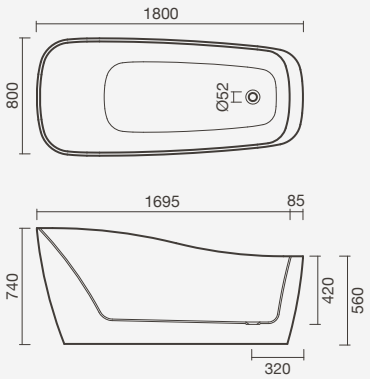

1700 x 750

Bathtubs	Reference	Weight	P.P.*	€
Bathtub > freestanding > outlet waste valve included				
	S202 0180 0000 000	70	1	•

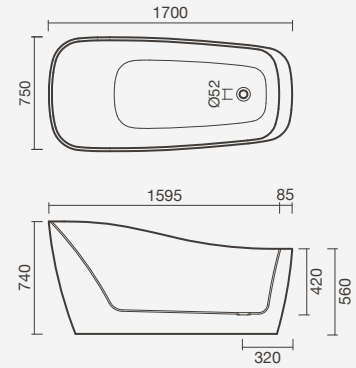



ZAHA 1800 x 800 *freestanding* acrylic bathtub with BALANCE floor-mounted faucet

Patricia



COLOURS

White

DIMENSIONS AND CAPACITY

1850 x 1050 - 284 litres

MATERIAL

Acrylic

PATRICIA acrylic hydromassage bathtub with acrylic panels






1850 x 1050

Bathtubs	Reference	Weight	P.P.*	€
Bathtub				
Smooth surface	S200 3760 0000 000	26	10	•
Anti-slip surface	S200 3767 1400 000	28	10	•
Bathtub supports				
Support feet	S101 0150 0000 000	3		•
Support structure	S200 8507 4045 800	13	10	•
Hydromassage bathtubs	Reference	Weight	P.P.*	€
Hid Dorsal				
Smooth surface	S200 3765 2100 000	68	1	•
Anti-slip surface	S200 3767 1600 000	68	1	•
Multijet Digital	S200 3765 2700 000	70	1	•
Multijet Dorsal	S200 3765 2800 000	71	1	•
Acrylic panels for bathtubs				
Front 1850 x 560	S200 2900 5000 000	5	20	•
Side 1050 x 560	S200 3330 5000 000	2	20	•

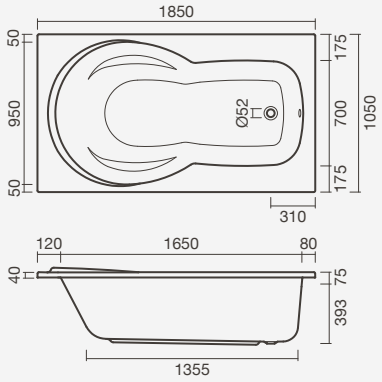



PATRICIA acrylic hydromassage bathtub with acrylic panels

Weights (kg) and measurements (mm) merely indicative • Unitary prices unless otherwise specified • VAT not included • Hydromassage bathtubs include support

Quattro



QUATTRO acrylic hydromassage bathtub with acrylic panels

COLOURS

White

DIMENSIONS AND CAPACITY

1800 x 1000 - 270 litres

MATERIAL

Acrylic



1800 x 1000

Bathtubs	Reference	Weight	P.P.*	€
Bathtub	S200 3810 0000 000	32	10	•
Bathtub supports				
Support feet	S101 0110 0000 000	3		•
Support structure	S200 8497 4245 800	10	10	•
Hydromassage bathtubs	Reference	Weight	P.P.*	€
Hid Digital	S200 3815 2000 000	60	1	•
Hid Dorsal	S200 3815 2100 000	61	1	•
Multijet Digital	S200 3815 2700 000	62	1	•
Multijet Dorsal	S200 3815 2800 000	63	1	•
Acrylic panels for bathtubs				
Front 1800 x 560	S200 3820 0000 000	4	10	•
Side 1000 x 560 - Left	S200 3800 0000 000	2	10	•
Side 1000 x 560 - Right	S200 3790 0000 000	2	10	•

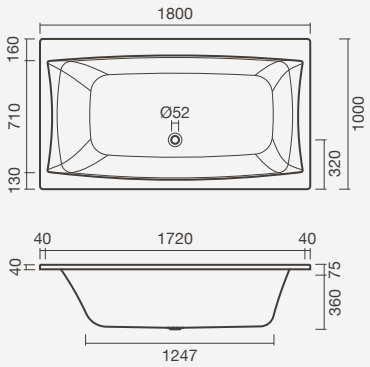



QUATTRO acrylic hydromassage bathtub with acrylic panels

Vita



VITA Hid Digital acrylic hydromassage bathtub with acrylic panels

COLOURS

White

DIMENSIONS AND CAPACITY

1900 x 900 - 328 litres
1800 x 900 - 305 litres
1800 x 800 - 262 litres

MATERIAL

Acrylic



1900 x 900

Bathtubs	Reference	Weight	P.P.*	€
Bathtub	S200 4730 0000 000	24	10	•
Bathtub supports				
Support feet	S201 0590 0000 000	3		•
Support structure	S200 8517 4145 800	10	10	•
Hydromassage bathtubs	Reference	Weight	P.P.*	€
Hid Digital	S200 4735 2000 000	54	1	•
Hid Dorsal	S200 4735 2100 000	55	1	•
Multijet Digital	S200 4735 2700 000	56	1	•
Multijet Dorsal	S200 4735 2800 000	57	1	•
Acrylic panels for bathtubs				
Front 1900 x 560 *	S200 4745 2300 000	7	10	•
L - 1900 x 900 x 535 - Left	S200 4725 2300 001	11	1	•
L - 1900 x 900 x 535 - Right	S200 4715 2300 001	11	1	•

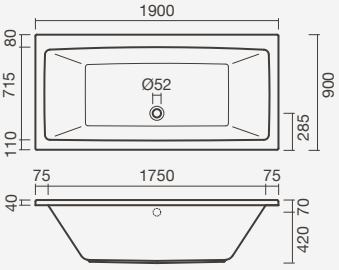

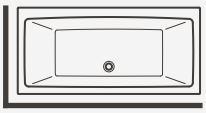

Left Panel

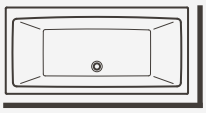

Right Panel

* It is only possible to use the front panel alone, in a between walls application

1800 x 900

Bathtubs	Reference	Weight	P.P.*	€
Bathtub	S200 4700 0000 000	24	10	•
Bathtub supports				
Support feet	S201 0590 0000 000	3		•
Support structure	S200 8497 4245 800	10	10	•
Hydromassage bathtubs	Reference	Weight	P.P.*	€
Hid Digital	S200 4705 2000 000	54	1	•
Hid Dorsal	S200 4705 2100 000	55	1	•
Multijet Digital	S200 4705 2700 000	56	1	•
Multijet Dorsal	S200 4705 2800 000	57	1	•
Acrylic panels for bathtubs				
Front 1800 x 560	S200 2890 5000 000	4	20	•
Side 900 x 560	S200 3320 5000 000	2	10	•
L - 1800 x 900 x 535 - Left	S200 4695 2300 001	10	8	•
L - 1800 x 900 x 535 - Right	S200 4685 2300 001	10	8	•

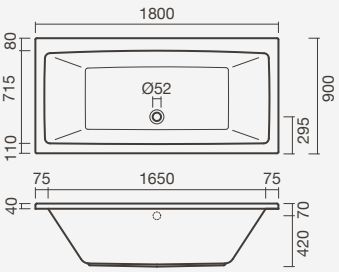

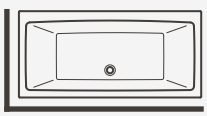

Tablier Gauche

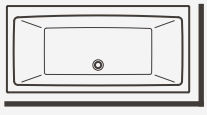

Tablier Droit

1800 x 800

Bathtubs	Reference	Weight	P.P.*	€
Bathtub	S200 4660 0000 000	22	10	•
Bathtub supports				
Support feet	S101 0140 0000 000	2		•
Support structure	S200 8487 4345 800	9	10	•
Hydromassage bathtubs	Reference	Weight	P.P.*	€
Hid Digital	S200 4665 2000 000	52	1	•
Hid Dorsal	S200 4665 2100 000	53	1	•
Multijet Digital	S200 4665 2700 000	54	1	•
Multijet Dorsal	S200 4665 2800 000	55	1	•
Acrylic panels for bathtubs				
Front 1800 x 560	S200 2890 5000 000	4	20	•
Side 800 x 560	S200 3310 5000 000	2	10	•
L - 1800 x 800 x 535 - Left	S200 4655 2300 001	9	1	•
L - 1800 x 800 x 535 - Right	S200 4645 2300 001	9	1	•

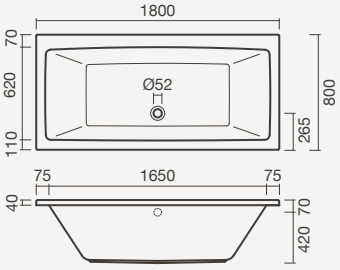

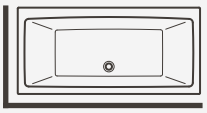

Left Panel

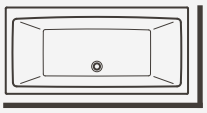

Right Panel



Detail of the VITA Hid Digital acrylic bathtub with standard acrylic panels



VITA Hid Digital acrylic hydromassage bathtub with acrylic panels

Raquel



COLOURS

White

DIMENSIONS AND CAPACITY

1800 x 900 - 297 litres

MATERIAL

Acrylic

RAQUEL Hid Dorsal acrylic hydromassage bathtub with acrylic panels



1800 x 900

Bathtubs	Reference	Weight	P.P.*	€
Bathtub	S200 3830 0000 000	25	10	•
Bathtub supports				
Support feet	S201 0590 0000 000	2		•
Support structure	S200 8497 4245 800	10	10	•
Hydromassage bathtubs	Reference	Weight	P.P.*	€
Hid Digital	S200 3835 2000 000	60	1	•
Hid Dorsal	S200 3835 2100 000	61	1	•
Multijet Digital	S200 3835 2700 000	62	1	•
Multijet Dorsal	S200 3835 2800 000	63	1	•
Acrylic panels for bathtubs				
Front 1800 x 560	S200 2890 5000 000	4	20	•
Side 900 x 560	S200 3320 5000 000	2	10	•

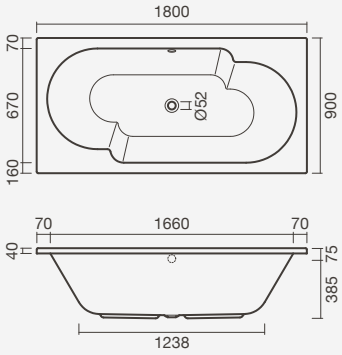



RAQUEL Hid Dorsal acrylic hydromassage bathtub interior detail

Weights (kg) and measurements (mm) merely indicative • Unitary prices unless otherwise specified • VAT not included • Hydromassage bathtubs include support

Plaza



PLAZA acrylic bathtub with acrylic panels

COLOURS

White

DIMENSIONS AND CAPACITY

1800 x 800 - 287 litres
1700 x 800 - 264 litres

MATERIAL

Acrylic



1800 x 800

Bathtubs	Reference	Weight	P.P.*	€
Bathtub	S200 3780 0000 000	23	5	•
Bathtub supports				
Support feet	S101 0140 0000 000	2		•
Support structure	S200 8667 3999 900	9	10	•
Hydromassage bathtubs	Reference	Weight	P.P.*	€
Hid Digital	S200 3785 2000 000	52	1	•
Hid Dorsal	S200 3785 2100 000	53	1	•
Multijet Digital	S200 3785 2700 000	54	1	•
Multijet Dorsal	S200 3785 2800 000	55	1	•
Acrylic panels for bathtubs				
Front 1800 x 560	S200 2890 5000 000	4	20	•
Side 800 x 560	S200 3310 5000 000	2	10	•

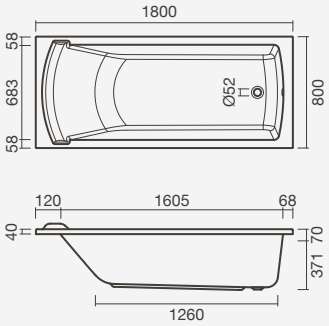

1700 x 800

Bathtubs	Reference	Weight	P.P.*	€
Bathtub	S200 3770 0000 000	24	10	•
Bathtub supports				
Support feet	S101 0140 0000 000	2		•
Support structure	S200 8657 3899 900	8	10	•
Hydromassage bathtubs	Reference	Weight	P.P.*	€
Hid Digital	S200 3775 2000 000	50	1	•
Hid Dorsal	S200 3775 2100 000	51	1	•
Multijet Digital	S200 3775 2700 000	52	1	•
Multijet Dorsal	S200 3775 2800 000	53	1	•
Acrylic panels for bathtubs				
Front 1700 x 560	S200 2860 5000 000	4	10	•
Side 800 x 560	S200 3310 5000 000	2	10	•

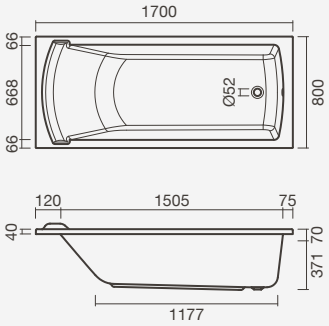

Cubic



CUBIC acrylic bathtub with CUBIC bathtub panel and BLOOM recessed bath /shower faucet

COLOURS

White

DIMENSIONS AND CAPACITY

1800 x 800 - 265 litres
1700 x 800 - 224 litres
1700 x 750 - 206 litres
1700 x 700 - 186 litres
1600 x 800 - 211 litres
1600 x 750 - 201 litres
1600 x 700 - 172 litres
1500 x 700 - 164 litres
1400 x 700 - 143 litres

MATERIAL

Acrylic



1800 x 800

Bathtubs	Reference	Weight	P.P.*	€
Bathtub	S200 2490 0000 000	26	10	•
Bathtub supports				
Support feet	S101 0140 0000 000	2		•
Support structure	S200 8667 3999 900	9	10	•
Hydromassage bathtubs	Reference	Weight	P.P.*	€
Hid Digital	S200 2495 2000 000	52	1	•
Hid Dorsal	S200 2495 2100 000	53	1	•
Multijet Digital	S200 2495 2700 000	54	1	•
Multijet Dorsal	S200 2495 2800 000	55	1	•
Acrylic panels for bathtubs				
Front 1800 x 500	S200 2400 4800 000	5	10	•
Side 800 x 500	S200 2350 4800 000	2	10	•

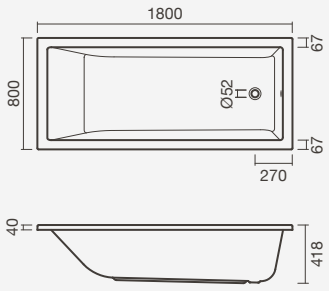

1700 x 800

Bathtubs	Reference	Weight	P.P.*	€
Bathtub	S200 2480 0000 000	24	10	•
Bathtub supports				
Support feet	S101 0140 0000 000	2		•
Support structure	S200 8657 3899 900	8	10	•
Hydromassage bathtubs	Reference	Weight	P.P.*	€
Hid Digital	S200 2485 2000 000	50	1	•
Hid Dorsal	S200 2485 2100 000	51	1	•
Multijet Digital	S200 2485 2700 000	52	1	•
Multijet Dorsal	S200 2485 2800 000	53	1	•
Acrylic panels for bathtubs				
Front 1700 x 500	S200 2390 4800 000	5	10	•
Side 800 x 500	S200 2350 4800 000	2	10	•

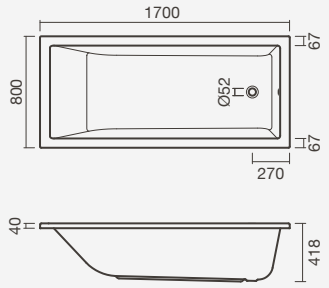

1600 x 800

Bathtubs	Reference	Weight	P.P.*	€
Bathtub	S200 2470 0000 000	21	10	•
Bathtub supports				
Support feet	S101 0140 0000 000	2		•
Support structure	S200 8627 3599 900	7	10	•
Hydromassage bathtubs	Reference	Weight	P.P.*	€
Hid Digital	S200 2475 2000 000	48	1	•
Hid Dorsal	S200 2475 2100 000	49	1	•
Multijet Digital	S200 2475 2700 000	50	1	•
Multijet Dorsal	S200 2475 2800 000	51	1	•
Acrylic panels for bathtubs				
Front 1600 x 500	S200 2380 4800 000	5	10	•
Side 800 x 500	S200 2350 4800 000	2	10	•

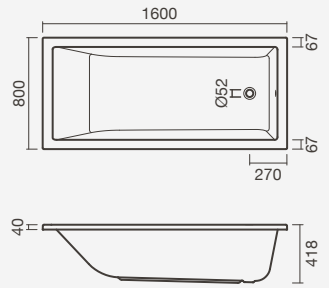

1700 x 750

Bathtubs	Reference	Weight	P.P.*	€
Bathtub	S200 2460 0000 000	19	10	•
Bathtub supports				
Support feet	S101 0130 0000 000	2		•
Support structure	S200 8647 3799 900	8	10	•
Hydromassage bathtubs	Reference	Weight	P.P.*	€
Hid Digital	S200 2465 2000 000	48	1	•
Hid Dorsal	S200 2465 2100 000	49	1	•
Multijet Digital	S200 2465 2700 000	50	1	•
Multijet Dorsal	S200 2465 2800 000	51	1	•
Acrylic panels for bathtubs				
Front 1700 x 500	S200 2390 4800 000	5	10	•
Side 750 x 500	S200 2340 4800 000	2	10	•

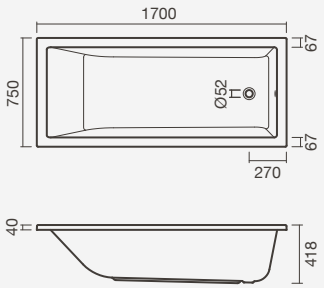

1600 x 750

Bathtubs	Reference	Weight	P.P.*	€
Bathtub	S200 2450 0000 000	18	10	•
Bathtub supports				
Support feet	S101 0130 0000 000	2		•
Support structure	S200 8617 3499 900	8	10	•
Hydromassage bathtubs	Reference	Weight	P.P.*	€
Hid Digital	S200 2455 2000 000	46	1	•
Hid Dorsal	S200 2455 2100 000	47	1	•
Multijet Digital	S200 2455 2700 000	48	1	•
Multijet Dorsal	S200 2455 2800 000	49	1	•
Acrylic panels for bathtubs				
Front 1600 x 500	S200 2380 4800 000	5	10	•
Side 750 x 500	S200 2340 4800 000	2	10	•

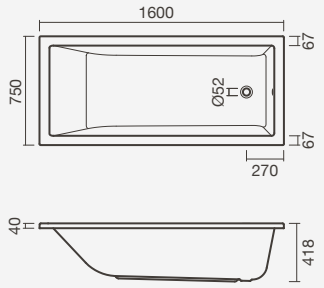

1700 x 700

Bathtubs	Reference	Weight	P.P.*	€
Bathtub	S200 2430 0000 000	19	10	•
Bathtub supports				
Support feet	S101 0120 0000 000	2		•
Support structure	S200 8637 3699 900	8	10	•
Hydromassage bathtubs	Reference	Weight	P.P.*	€
Hid Digital	S200 2435 2000 000	48	1	•
Hid Dorsal	S200 2435 2100 000	49	1	•
Multijet Digital	S200 2435 2700 000	50	1	•
Multijet Dorsal	S200 2435 2800 000	51	1	•
Acrylic panels for bathtubs				
Front 1700 x 500	S200 2390 4800 000	5	10	•
Side 700 x 500	S200 2330 4800 000	2	10	•

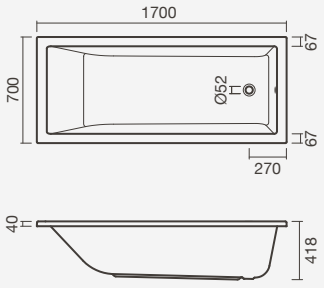

1600 x 700

Bathtubs	Reference	Weight	P.P.*	€
Bathtub	S200 2420 0000 000	18	10	•
Bathtub supports				
Support feet	S101 0120 0000 000	2		•
Support structure	S200 8607 3399 900	8	10	•
Hydromassage bathtubs	Reference	Weight	P.P.*	€
Hid Digital	S200 2425 2000 000	44	1	•
Hid Dorsal	S200 2425 2100 000	45	1	•
Multijet Digital	S200 5825 2700 000	46	1	•
Multijet Dorsal	S200 2425 2800 000	47	1	•
Acrylic panels for bathtubs				
Front 1600 x 500	S200 2380 4800 000	5	10	•
Side 700 x 500	S200 2330 4800 000	2	10	•

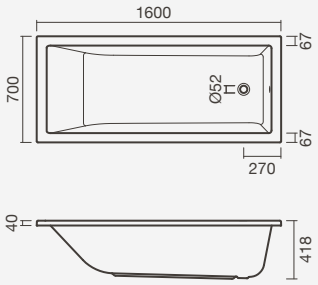

1500 x 700

Bathtubs	Reference	Weight	P.P.*	€
Bathtub	S200 2410 0000 000	19	10	•
Bathtub supports				
Support feet	S101 0120 0000 000	2		•
Support structure	S200 8597 3299 900	6	10	•
Acrylic panels for bathtubs				
Front 1500 x 500	S200 2370 4800 000	4	10	•
Side 700 x 500	S200 2330 4800 000	2	10	•

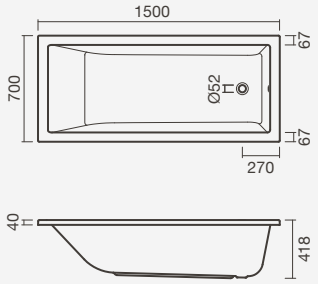

1400 x 700

Bathtubs	Reference	Weight	P.P.*	€
Bathtub	S200 2440 0000 000	18	10	•
Bathtub supports				
Support feet	S101 0120 0000 000	2		•
Support structure	S200 8587 3199 900	5	10	•
Acrylic panels for bathtubs				
Frontal 1400 x 500	S200 2360 4800 000	4	10	•
Side 700 x 500	S200 2330 4800 000	2	10	•

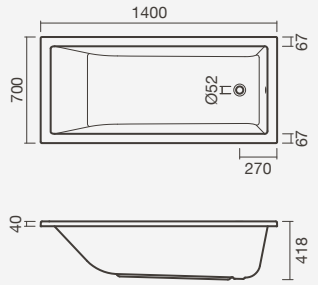

Rosario



ROSARIO acrylic hydromassage bathtub with acrylic panels

COLOURS

White

DIMENSIONS AND CAPACITY

1800 x 800 - 232 litres

MATERIAL

Acrylic



1800 x 800

Bathtubs	Reference	Weight	P.P.*	€
Bathtub	S200 4160 0000 000	23	5	•
Bathtub supports				
Support feet	S101 0140 0000 000	2		•
Support structure	S200 8487 4345 800	9	10	•
Hydromassage bathtubs	Reference	Weight	P.P.*	€
Hid Digital	S200 4165 2000 000	52	1	•
Hid Dorsal	S200 4165 2100 000	53	1	•
Multijet Digital	S200 4165 2700 000	54	1	•
Multijet Dorsal	S200 4165 2800 000	55	1	•
Acrylic panels for bathtubs				
Front 1800 x 560	S200 2890 5000 000	4	20	•
Side 800 x 560	S200 3310 5000 000	2	10	•

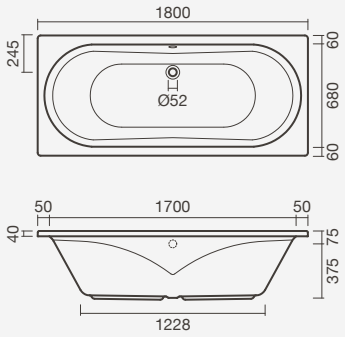

Carolina



CAROLINA acrylic bathtub with acrylic panels and ORBIS faucet

COLOURS

White

DIMENSIONS AND CAPACITY

1700 x 800 - 221 litres

MATERIAL

Acrylic







1700 x 800

Bathtubs	Reference	Weight	P.P.*	€
Bathtub				
Smooth surface	S200 2290 0000 000	20	10	•
Anti-slip surface	S200 2297 1400 000	20	10	•
Bathtub supports				
Support feet	S101 0140 0000 000	2		•
Support structure	S200 8657 3899 900	8	10	•

Hydromassage bathtubs	Reference	Weight	P.P.*	€
Hid Digital				
Smooth surface	S200 2295 2000 000	50	1	•
Anti-slip surface	S200 2297 1300 000	50	1	•
Hid Dorsal				
Smooth surface	S200 2295 2100 000	51	1	•
Anti-slip surface	S200 2297 1600 000	51	1	•
Multijet Digital	S200 2295 2700 000	52	1	•
Multijet Dorsal	S200 2295 2800 000	53	1	•

Acrylic panels for bathtubs				
Front 1700 x 560	S200 2860 5000 000	4	10	•
Side 800 x 560	S200 3310 5000 000	2	10	•

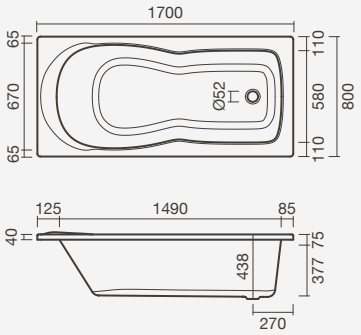



CAROLINA acrylic bathtub with acrylic panels and ORBIS faucet

Weights (kg) and measurements (mm) merely indicative • Unitary prices unless otherwise specified • VAT not included • Hydromassage bathtubs include support

Nex



NEX acrylic bathtub with wengue wood panels and UNIC faucet

COLOURS

White

DIMENSIONS AND CAPACITY

1700 x 800 - 239 litres
1700 x 750 - 212 litres
1700 x 700 - 211 litres
1600 x 700 - 190 litres
1500 x 750 - 176 litres

MATERIAL

Acrylic



1700 x 800

Bathtubs	Reference	Weight	P.P.*	€
Bathtub	S200 3620 0000 000	24	10	•
Bathtub supports				
Support feet	S101 0140 0000 000	2		•
Support structure	S200 8657 3899 900	8	10	•
Hydromassage bathtubs	Reference	Weight	P.P.*	€
Hid Digital	S200 3625 2000 000	52	1	•
Hid Dorsal	S200 3625 2100 000	53	1	•
Multijet Digital	S200 3625 2700 000	54	1	•
Multijet Dorsal	S200 3625 2800 000	55	1	•
Acrylic panels for bathtubs				
Front 1700 x 560	S200 2860 5000 000	4	10	•
Side 800 x 560	S200 3310 5000 000	2	10	•

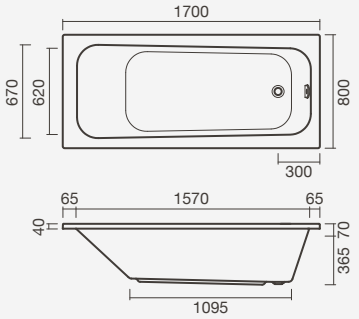

1700 x 750

Bathtubs	Reference	Weight	P.P.*	€
Bathtub	S200 3660 0000 000	22	10	•
Bathtub supports				
Support feet	S101 0130 0000 000	2		•
Support structure	S200 8647 3799 900	8	10	•
Hydromassage bathtubs	Reference	Weight	P.P.*	€
Hid Digital	S200 3665 2000 000	48	1	•
Hid Dorsal	S200 3665 2100 000	49	1	•
Multijet Digital	S200 3665 2700 000	50	1	•
Multijet Dorsal	S200 3665 2800 000	51	1	•
Acrylic panels for bathtubs				
Front 1700 x 560	S200 2860 5000 000	4	10	•
Side 750 x 560	S200 3280 5000 000	2	10	•
Front 1700 x 500	S200 2870 4800 000	4	10	•
Side 750 x 500	S200 3290 4800 000	2	10	•

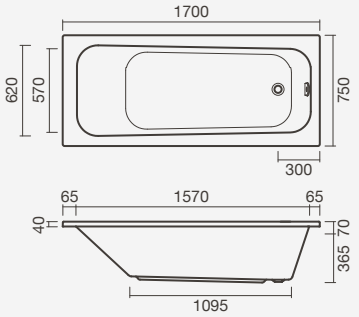

1500 x 750

Bathtubs	Reference	Weight	P.P.*	€
Bathtub	S200 3540 0000 000	19	10	•
Bathtub supports				
Support feet	S101 0130 0000 000	2		•
Support structure	S200 8477 6299 900	8	10	•
Acrylic panels for bathtubs				
Front 1500 x 500	S200 2810 4800 000	4		•
Side 750 x 500	S200 3290 4800 000	2		•

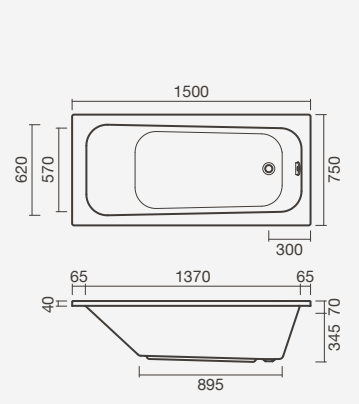

1700 x 700

Bathtubs	Reference	Weight	P.P.*	€
Bathtub	S200 3650 0000 000	21	10	•
Bathtub supports				
Support feet	S101 0120 0000 000	2		•
Support structure	S200 8637 3699 900	8	10	•
Hydromassage bathtubs	Reference	Weight	P.P.*	€
Hid Digital	S200 3655 2000 000	48	1	•
Hid Dorsal	S200 3655 2100 000	49	1	•
Multijet Digital	S200 3655 2700 000	50	1	•
Multijet Dorsal	S200 3655 2800 000	51	1	•
Acrylic panels for bathtubs				
Front 1700 x 560	S200 2860 5000 000	4		•
Side 700 x 560	S200 3250 5000 000	2		•
Front 1700 x 500	S200 2870 4800 000	4		•
Side 700 x 500	S200 3260 4800 000	2		•

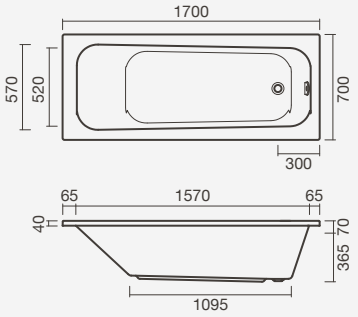

1600 x 700

Bathtubs	Reference	Weight	P.P.*	€
Bathtub	S200 3640 0000 000	20	10	•
Bathtub supports				
Support feet	S101 0120 0000 000	2		•
Support structure	S200 8607 3399 900	8	10	•
Hydromassage bathtubs	Reference	Weight	P.P.*	€
Hid Digital	S200 3645 2000 000	44	1	•
Hid Dorsal	S200 3645 2100 000	45	1	•
Multijet Digital	S200 3645 2700 000	46	1	•
Multijet Dorsal	S200 3645 2800 000	47	1	•
Acrylic panels for bathtubs				
Front 1600 x 560	S200 2830 5000 000	4	10	•
Side 700 x 560	S200 3250 5000 000	2	10	•
Front 1600 x 500	S200 2840 4800 000	4	10	•
Side 700 x 500	S200 3260 4800 000	2	10	•

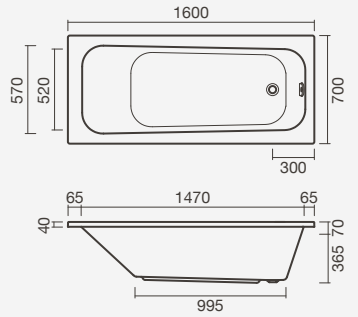



NEX acrylic bathtub with wengue wood panels and UNIC faucet

Helena



HELENA acrylic bathtub with acrylic panels and VIVA bath mixer

COLOURS

White

DIMENSIONS AND CAPACITY

1700 x 700 - 180 litres
1600 x 700 - 160 litres

MATERIAL

Acrylic



1700 x 700

Bathtubs	Reference	Weight	P.P.*	€
Bathtub				
Smooth surface	S200 3020 0000 000	20	10	•
Anti-slip surface	S200 3027 1400 000	20	10	•
Bathtub supports				
Support feet	S101 0120 0000 000	2		•
Support structure	S200 8637 3699 900	8	10	•
Acrylic panels for bathtubs				
Front 1700 x 560	S200 2860 5000 000	4	10	•
Side 700 x 560	S200 3250 5000 000	2	10	•
Front 1700 x 500	S200 2870 4800 000	4	10	•
Side 700 x 500	S200 3260 4800 000	2	10	•

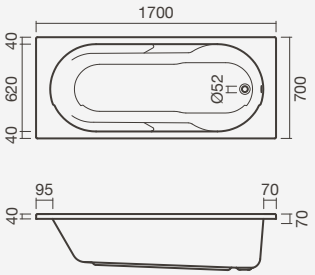

1600 x 700

Bathtubs	Reference	Weight	P.P.*	€
Bathtub				
Smooth surface	S200 3000 0000 000	19	10	•
Anti-slip surface	S200 3007 1400 000	19	10	•
Bathtub supports				
Support feet	S101 0120 0000 000	2		•
Support structure	S200 8607 3399 900	8	10	•
Acrylic panels for bathtubs				
Front 1600 x 560	S200 2830 5000 000	4	10	•
Side 700 x 560	S200 3250 5000 000	2	10	•
Front 1600 x 500	S200 2840 4800 000	4	10	•
Side 700 x 500	S200 3260 4800 000	2	10	•

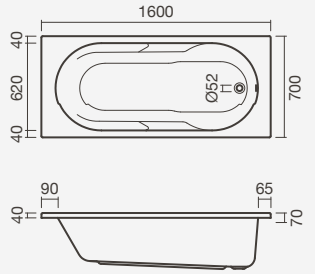

Sara



SARA acrylic oval bathtub with BALANCE floor-mounted faucet

COLOURS

White

DIMENSIONS AND CAPACITY

1800 x 900 - 233 litres

MATERIAL

Acrylic



1800 x 900

Bathtubs	Reference	Weight	P.P.*	€
Bathtub	S200 4190 0000 000	23	5	•
Bathtub supports				
Support feet	S201 0590 0000 000	3		•

Hydromassage bathtubs	Reference	Weight	P.P.*	€
Hid Digital	S200 4195 2000 000	58	1	•
Hid Dorsal	S200 4195 2100 000	60	1	•
Multijet Digital	S200 4195 2700 000	68	1	•
Multijet Dorsal	S200 4195 2800 000	70	1	•

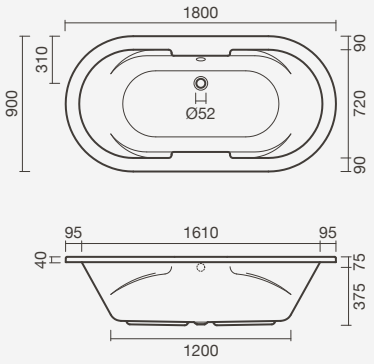



SARA acrylic oval bathtub with BALANCE floor-mounted faucet

Weights (kg) and measurements (mm) merely indicative • Unitary prices unless otherwise specified • VAT not included • Hydromassage bathtubs include support

Nex Corner



NEX Hid Dorsal acrylic corner hydromassage bathtub - left application model - with own wengue wood panels and UNIC faucet

COLOURS

White

DIMENSIONS AND CAPACITY

1600 x 1000 - 240 litres

MATERIAL

Acrylic



1600 x 1000 - LEFT

Bathtubs	Reference	Weight	P.P.*	€
Bathtub	S200 3590 0000 000	22	10	•
Bathtub				
Support feet included	S200 3597 3000 000	22	1	•
Support structure included	S200 3597 2300 000	22	1	•
Bathtub supports				
Support feet	S200 8705 2399 900	8		•
Support structure	S200 8695 2399 900	12	10	•
Hydromassage bathtubs	Reference	Weight	P.P.*	€
Hid Digital	S200 3585 2000 000	56	1	•
Hid Dorsal	S200 3585 2100 000	58	1	•
Multijet Digital	S200 3585 2700 000	59	1	•
Multijet Dorsal	S200 3585 2800 000	60	1	•
Acrylic panel for bathtubs				
Corner - left (520mm h.)	S200 3600 0000 000	5	1	•
Wengue wood panels for bathtubs				
Front 1650 x 560mm	S200 3610 0020 100	7	1	•
Back 1580 x 560mm	S200 2915 2320 100	7	1	•
Side 990 x 560mm	S200 5835 2320 100	4	1	•
Side 590x 560mm	S200 3630 0020 100	3	1	•

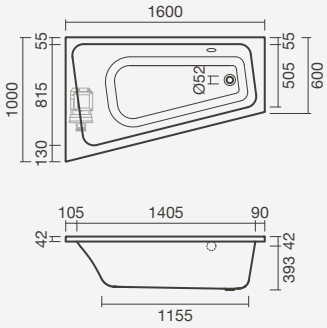

1600 x 1000 - RIGHT

Bathtubs	Reference	Weight	P.P.*	€
Bathtub	S200 3570 0000 000	22	10	•
Bathtub				
Support feet included	S200 3587 3000 000	22	1	•
Support structure included	S200 3587 2300 000	22	1	•
Bathtub supports				
Support feet	S200 8705 2399 900	8		•
Support structure	S200 8695 2399 900	12	10	•
Hydromassage bathtubs	Reference	Weight	P.P.*	€
Hid Digital	S200 3575 2300 000	56	1	•
Hid Dorsal	S200 3575 2100 000	58	1	•
Multijet Digital	S200 3575 2700 000	59	1	•
Multijet Dorsal	S200 3575 2800 000	60	1	•
Acrylic panel for bathtubs				
Corner - right (520mm h.)	S200 3580 0000 000	5	1	•
Wengue wood panels for bathtubs				
Front 1650 x 560mm	S200 3610 0020 100	7	1	•
Back 1580 x 560mm	S200 2915 2320 100	7	1	•
Side 990 x 560mm	S200 5835 2320 100	4	1	•
Side 590 x 560mm	S200 3630 0020 100	3	1	•

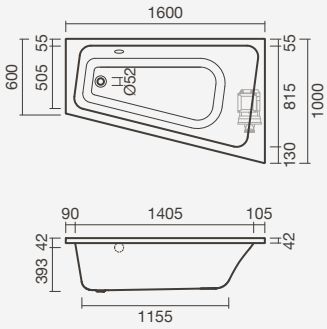

Fatima



FATIMA acrylic corner bathtub with own acrylic panel - right application model - and UNIC faucet

COLOURS

White

DIMENSIONS AND CAPACITY

1505 x 1005 - 210 litres

MATERIAL

Acrylic



1505 x 1005 - LEFT

Bathtubs	Reference	Weight	P.P.*	€
Bathtub > in the box: bathtub and bathtub support structure				
	S200 2787 2300 000	37	6	•
Bathtub supports				
Support feet	S101 0110 0000 000	3		•
Support structure	S201 0600 0000 000	10	10	•
Hydromassage bathtubs	Reference	Weight	P.P.*	€
Hid Digital	S200 2785 2000 000	58	1	•
Hid Dorsal	S200 2785 2100 000	59	1	•
Multijet Digital	S200 2785 2700 000	60	1	•
Multijet Dorsal	S200 2785 2800 000	61	1	•
Acrylic panel for bathtubs				
Corner (height: 560mm)	S200 2790 0000 000	6	1	•

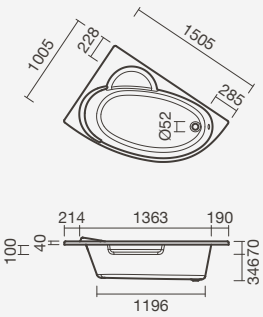

1505 x 1005 - RIGHT

Bathtubs	Reference	Weight	P.P.*	€
Bathtub > in the box: bathtub and bathtub support structure				
	S200 2777 2300 000	37	6	•
Bathtub supports				
Support feet	S101 0110 0000 000	3		•
Support structure	S201 0600 0000 000	10	10	•
Hydromassage bathtubs	Reference	Weight	P.P.*	€
Hid Digital	S200 2775 2000 000	58	1	•
Hid Dorsal	S200 2775 2100 000	59	1	•
Multijet Digital	S200 2775 2700 000	60	1	•
Multijet Dorsal	S200 2775 2800 000	61	1	•
Acrylic panel for bathtubs				
Corner (height: 560mm)	S200 2790 0000 000	6	1	•

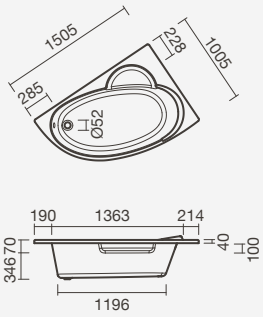

Isabel



ISABEL acrylic corner bathtub with own acrylic panel and BALANCE faucet

COLOURS

White

DIMENSIONS AND CAPACITY

1500 x 1500 - 327 litres

MATERIAL

Acrylic



1500 x 1500

Bathtubs	Reference	Weight	P.P.*	€
Bathtub > in the box: bathtub and bathtub support structure				
	S200 3037 2300 000	44	6	•
Bathtub supports				
Support feet	S101 0110 0000 000	3		•
Support structure	S101 0190 0000 000	10	10	•
Hydromassage bathtubs	Reference	Weight	P.P.*	€
Hid Digital	S200 3035 2000 000	58	1	•
Multijet Digital	S200 3035 2700 000	59	1	•
Acrylic panel for bathtubs				
Corner (height: 575mm)	S200 3040 0000 000	4	1	•

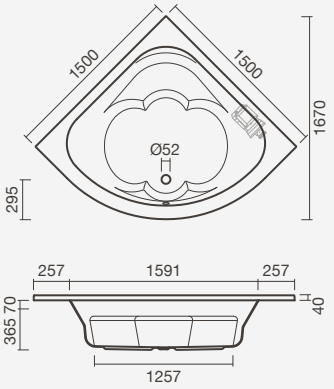



ISABEL acrylic corner bathtub with own acrylic panel and BALANCE faucet

Weights (kg) and measurements (mm) merely indicative • Unitary prices unless otherwise specified • VAT not included • Hydromassage bathtubs include support

Margarida

COLOURS

White

DIMENSIONS AND CAPACITY

1450 x 1450 - 234 litres

MATERIAL

Acrylic



MARGARIDA acrylic corner bathtub with own acrylic panel and BALANCE faucet



1450 x 1450

Bathtubs	Reference	Weight	P.P.*	€
Bathtub > in the box: bathtub and bathtub support structure	S200 3477 2300 000	38	1	•
Bathtub supports				
Support feet	S101 0110 0000 000	3		•
Support structure	S101 0190 0000 000	10	10	•
Hydromassage bathtubs	Reference	Weight	P.P.*	€
Hid Digital	S200 3475 2000 000	54	1	•
Hid Dorsal	S200 3475 2100 000	55	1	•
Multijet Digital	S200 3475 2700 000	56	1	•
Multijet Dorsal	S200 3475 2800 000	57	1	•
Acrylic panel for bathtubs				
Corner (height: 565mm)	S200 3480 0000 000	7	10	•

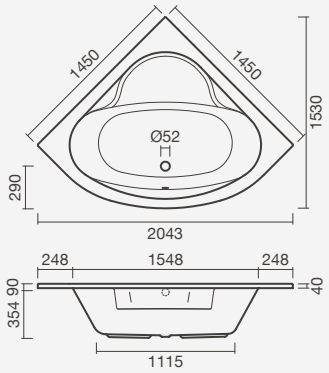



MARGARIDA acrylic panel design detail

Area

COLOURS

White

DIMENSIONS AND CAPACITY

1400 x 1400 - 257 litres

MATERIAL

Acrylic

AREA acrylic corner bathtub with own acrylic panel



1400 x 1400

Bathtubs	Reference	Weight	P.P.*	€
Bathtub > in the box: bathtub and bathtub support structure				
	S200 2217 2300 000	38	1	•
Bathtub supports				
Support feet	S101 0110 0000 000	3		•
Support structure	S101 0190 0000 000	10	10	•
Hydromassage bathtubs	Reference	Weight	P.P.*	€
Hid Digital	S200 2215 2000 000	52	1	•
Hid Dorsal	S200 2215 2100 000	53	1	•
Multijet Digital	S200 2215 2700 000	54	1	•
Multijet Dorsal	S200 2215 2800 000	55	1	•
Acrylic panel for bathtubs				
Corner (height: 560mm)	S200 2200 0000 000	5	10	•

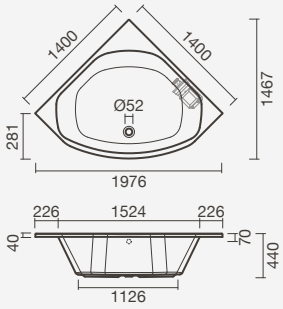



AREA acrylic panel design detail

Weights (kg) and measurements (mm) merely indicative • Unitary prices unless otherwise specified • VAT not included • Hydromassage bathtubs include support

Claudia



CLAUDIA acrylic corner bathtub with own acrylic panel and UNIC faucet

COLOURS

White

DIMENSIONS AND CAPACITY

1400 x 1400 - 276 litres

MATERIAL

Acrylic



1400 x 1400

Bathtubs	Reference	Weight	P.P.*	€
Bathtub > in the box: bathtub and bathtub support structure				
	S200 2317 2300 000	38	6	•
Bathtub supports				
Support feet	S101 0110 0000 000	3		•
Support structure	S101 0190 0000 000	10	10	•
Hydromassage bathtubs	Reference	Weight	P.P.*	€
Hid Digital	S200 2315 2000 000	52	1	•
Hid Dorsal	S200 2315 2100 000	53	1	•
Multijet Digital	S200 2315 2700 000	54	1	•
Multijet Dorsal	S200 2315 2800 000	55	1	•
Acrylic panel for bathtubs				
Corner (height: 580mm)	S200 2300 0000 000	4	1	•

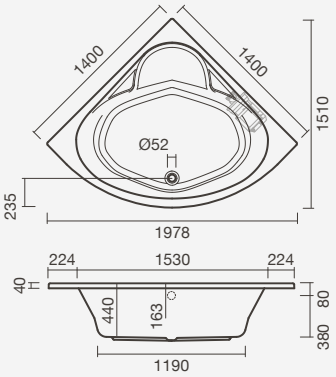



CLAUDIA acrylic corner bathtub with own acrylic panel and UNIC faucet

Weights (kg) and measurements (mm) merely indicative • Unitary prices unless otherwise specified • VAT not included • Hydromassage bathtubs include support

Rute



COLOURS

White

DIMENSIONS AND CAPACITY

1370 x 1370 - 260 litres

MATERIAL

Acrylic

RUTE acrylic corner bathtub with own acrylic panel and UNIC faucet



1370 x 1370

Bathtubs	Reference	Weight	P.P.*	€
Bathtub > in the box: bathtub and bathtub support structure	S200 4187 3000 000	34	10	•
Bathtub supports				
Support feet	S101 0110 0000 000	3		•
Support structure	S101 0190 0000 000	10	10	•
Hydromassage bathtubs	Reference	Weight	P.P.*	€
Hid Digital	S200 4185 2000 000	54	1	•
Multijet Digital	S200 4185 2700 000	55	1	•
Acrylic panel for bathtubs				
Corner (height: 565mm)	S200 4170 0000 0000	10	10	•

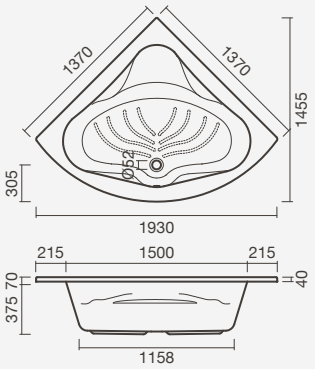



RUTE acrylic corner bathtub with own acrylic panel and UNIC faucet

Weights (kg) and measurements (mm) merely indicative • Unitary prices unless otherwise specified • VAT not included • Hydromassage bathtubs include support

Trevo



TREVO acrylic corner bathtub with own acrylic panel

COLOURS

White

DIMENSIONS AND CAPACITY

1350 x 1350 - 268 litres

MATERIAL

Acrylic



1350 x 1350

Bathtubs	Reference	Weight	P.P.*	€
Bathtub > in the box: bathtub and bathtub support structure				
	S200 4497 3000 000	35	1	•
Bathtub supports				
Support feet	S101 0110 0000 000	3		•
Support structure	S101 0190 0000 000	10	10	•
Hydromassage bathtubs	Reference	Weight	P.P.*	€
Hid Digital	S200 4495 2000 000	50	1	•
Hid Dorsal	S200 4495 2100 000	51	1	•
Multijet Digital	S200 4495 2700 000	52	1	•
Multijet Dorsal	S200 4495 2800 000	53	1	•
Acrylic panel for bathtubs				
Corner (height: 560mm)	S200 4480 0000 000	7	10	•

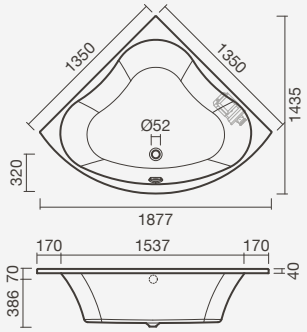



TREVO acrylic panel design detail

Oasis



COLOURS

White

DIMENSIONS AND CAPACITY

1300 x 1300 - 201 litres

MATERIAL

Acrylic

OASIS acrylic corner bathtub with own acrylic panel and UNIC faucet



1300 x 1300

Bathtubs	Reference	Weight	P.P.*	€
Bathtub > in the box: bathtub and bathtub support structure				
	S200 3697 3000 000	35	1	•
Bathtub supports				
Support feet	S101 0110 0000 000	3		•
Support structure	S101 0190 0000 000	10	10	•
Hydromassage bathtubs	Reference	Weight	P.P.*	€
Hid Digital	S200 3695 2000 000	54	1	•
Multijet Digital	S200 3695 2700 000	55	1	•
Acrylic panel for bathtubs				
Corner (height: 510mm)	S200 3680 0000 000	6	10	•

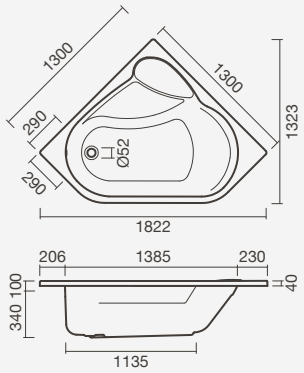



OASIS acrylic corner bathtub with own acrylic panel and UNIC faucet

Weights (kg) and measurements (mm) merely indicative • Unitary prices unless otherwise specified • VAT not included • Hydromassage bathtubs include support

Wood panels



COLOURS

Wengue (201)

COMPATIBILITY

Rectangular
acrylic bathtubs

MATERIAL

9mm wood panel:
durable, moisture
and water resistant

ASSEMBLY

Light and easy to assem-
ble: dual-lock fixing kit
allows panel-bathtub edge
alignment

Wengue finish wood panel with NEX bathtub

BETWEEN-WALLS APPLICATION - Front panel

Height: 560mm

Front panel	Reference	Weight	P.P.*	€
1800	TN20 0011 5232 0100	10	10	•
1700	S200 2955 2320 100	9	10	•
1600	S200 2935 2320 100	9	10	•

Height: 510mm

Front panel	Reference	Weight	P.P.*	€
1800	S200 2965 2320 100	9	10	•
1700	S200 2945 2320 100	9	10	•
1600	S200 2925 2320 100	8	10	•

On the product reference please input the chosen colour code in the ".." space

STAND-ALONE APPLICATION - Front panel + Stand-alone side panel

Height: 560mm

Front panel	Reference	Weight	P.P.*	€
1800	TN20 0011 5232 0100	10	10	•
1700	S200 2955 2320 100	9	10	•
1600	S200 2935 2320 100	9	10	•
Stand-alone side panel				
900	S200 3435 2320 100	6	10	•
800	TN20 0027 5232 0100	5	10	•
750	TN20 0023 5232 0100	5	10	•
700	TN20 0019 5232 0100	4	10	•

Height: 510mm

Front panel	Reference	Weight	P.P.*	€
1800	S200 2965 2320 100	9	10	•
1700	S200 2945 2320 100	9	10	•
1600	S200 2925 2320 100	8	10	•
Stand-alone side panel				
900	TN20 0029 5232 0100	6	10	•
800	S200 3405 2320 100	5	10	•
750	TN20 0021 5232 0100	5	10	•
700	TN20 0017 5232 0100	4	10	•

CORNER APPLICATION - Front panel + Side panel

Height: 560mm

Front panel	Reference	Weight	P.P.*	€
1800	TN20 0011 5232 0100	10	10	•
1700	S200 2955 2320 100	9	10	•
1600	S200 2935 2320 100	9	10	•
Side panel				
900	S200 3425 2320 100	6	10	•
800	TN20 0026 5232 0100	5	10	•
750	S200 3375 2320 100	5	10	•
700	S200 3355 2320 100	4	10	•

Height : 510mm

Front panel	Reference	Weight	P.P.*	€
1800	S200 2965 2320 100	9	10	•
1700	S200 2945 2320 100	9	10	•
1600	S200 2925 2320 100	8	10	•
Side panel				
900	TN20 0028 5232 0100	6	10	•
800	S200 3395 2320 100	5	10	•
750	S200 3365 2320 100	5	10	•
700	S200 3345 2320 100	4	10	•

Accessories



Universal curved headrest for curved bathtub backrests

BATHTUB HEADRESTS



Universal headrest

> compatible with acrylic bathtubs
> in polyurethane with a textured black finish
> in the box: headrest

For straight backrests	Weight	€
S200 8447 5705 900	1	•
For curved backrests		
S200 8437 5705 900	1	•



Basic headrest

> compatible with acrylic bathtubs
> in polyurethane with a textured black finish
> in the box: headrest

For curved backrests	Weight	€
S200 8347 5705 600	1	•

BATHTUB HANDLES



Bathtub handle

> compatible with acrylic bathtubs
> in the box: bathtub handle (1 unit)

Reference	Weight	€
S200 8397 5805 600	1	•

BATH WASTES





Bath waste and overflow

> compatible with acrylic bathtubs
> in the box: bath waste

Length: 1050mm	Weight	€
TNR2 0000 0000 0029	1	•
Length: 580mm		
TN20 0051 0000 0000	1	•

HYGIENE

Cleaning and desinfecting kit

> compatible with hydromassage systems
> in the box: cleaning and desinfecting kit

Reference	Weight	€
S101 0230 0000 000	1	•

REPAIR

Repair kit

> compatible with acrylic bathtubs
> in the box: repair kit

Reference	Weight	€
SR20 0000 0000 003	1	•

Queen



QUEEN *freestanding* enamelled steel bathtub with stand-alone panel and BALANCE floor-mounted faucet

COLOURS

White

Black

White - Red

DIMENSIONS AND CAPACITY

1800 x 800 - 230 litres

MATERIAL

Enamelled steel









1800 x 800 - *DROP-IN*

Bathtubs	Reference	Weight	P.P.*	White €
Bathtub				
> in the box: bathtub and soundproofing kit				
Smooth surface	S300 0225 7500 000	47	13	•
Anti-slip surface	S300 0225 7300 000	47	13	•
Accessories				
Screw-in suppport feet	S300 0252 3250 700	1		•
Repair kit	SR30 0000 0000 001	1		•

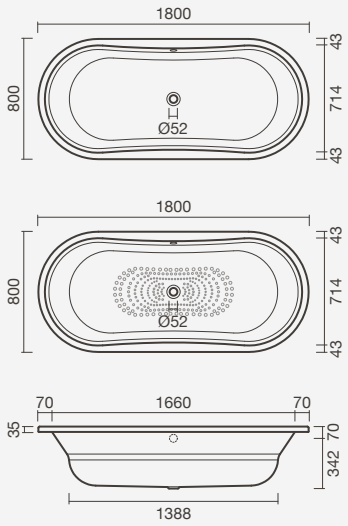

1800 x 800 - *FREESTANDING* WITH STAND-ALONE PANEL

Bathtubs	Reference	Weight	P.P.*	White €
Bathtub				
> in the box: bathtub, soundproofing kit, stand-alone panel and bath waste				
Anti-slip surface	S300 0221 2100 000	85	1	•

Bathtubs	Reference	Weight	P.P.*	Black €
Bathtub				
> in the box: bathtub, soundproofing kit, stand-alone panel and bath waste				
Anti-slip surface	S300 0221 2105 600	85	1	•
Accessories				
Screw-in suppport feet	S300 0252 3250 700	1		•
Repair kit	SR30 0000 0000 001	1		•

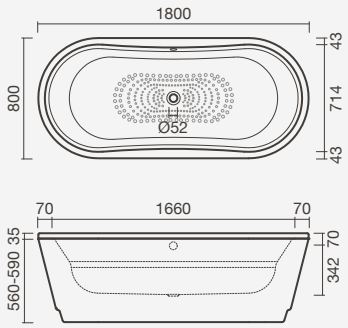

1800 x 800 - *FREESTANDING* WITH SUPPORT FEET - *WOODLINE*

Bathtubs	Reference	Weight	P.P.*	White €
Bathtub				
> metallic red hull exterior and glossy black support feet				
> in the box: bathtub, support feet and bath waste				
Anti-slip surface	S300 0242 6606 100	72	1	•
Accessories				
Screw-in suppport feet	S300 0252 3250 700	1		•
Repair kit	SR30 0000 0000 001	1		•

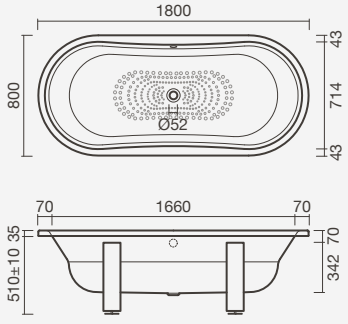

Hotel



HOTEL enamelled steel bathtub with SILK faucet

COLOURS

White

DIMENSIONS AND CAPACITY

1700 x 750 - 180 litres
1600 x 750 - 170 litres
1500 x 750 - 160 litres
1400 x 750 - 150 litres

MATERIAL

Enamelled steel



1700 x 750

Bathtubs	Reference	Weight	P.P.*	€
Bathtub > anti-slip surface				
	S300 0215 7100 000	28	22	•
Accessories				
Screw-in suppport feet	S300 0252 3250 700	1		•
Repair kit	SR30 0000 0000 001	1		•

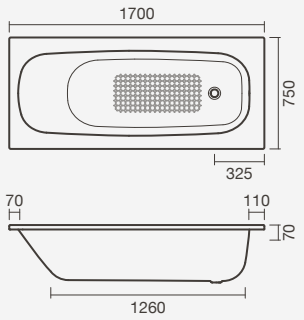

1600 x 750

Bathtubs	Reference	Weight	P.P.*	€
Bathtub > anti-slip surface				
	S300 0205 7100 000	25	22	•
Accessories				
Screw-in suppport feet	S300 0252 3250 700	1		•
Repair kit	SR30 0000 0000 001	1		•

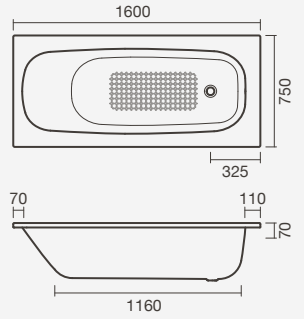

1500 x 750

Bathtubs	Reference	Weight	P.P.*	€
Bathtub > anti-slip surface				
	S300 0195 7100 000	26	22	•
Accessories				
Screw-in suppport feet	S300 0252 3250 700	1		•
Repair kit	SR30 0000 0000 001	1		•

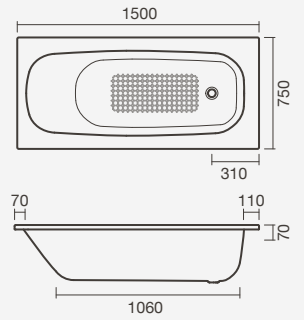

1400 x 750

Bathtubs	Reference	Weight	P.P.*	€
Bathtub > anti-slip surface				
	S300 0185 7100 000	24	22	•
Accessories				
Screw-in suppport feet	S300 0252 3250 700	1		•
Repair kit	SR30 0000 0000 001	1		•

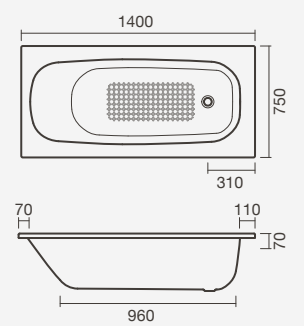

Europa



EUROPA enamelled steel bathtub with BALANCE faucet

COLOURS

White

DIMENSIONS AND CAPACITY

1700 x 700 - 190 litres
1600 x 700 - 180 litres
1500 x 700 - 170 litres
1400 x 700 - 160 litres
1300 x 700 - 150 litres
1200 x 700 - 140 litres
1050 x 700 - 110 litres

MATERIAL

Enamelled steel



1700 x 700

Bathtubs	Reference	Weight	P.P.*	€
Bathtub				
Smooth surface	S300 0135 7000 000	25	24	•
Anti-slip surface	S300 0135 7100 000	25	24	•
Accessories				
Screw-in suppport feet > incompatible with Europa Infantil bathtub with seat				
	S300 0252 3250 700	1		•
Repair kit	SR30 0000 0000 001	1		•

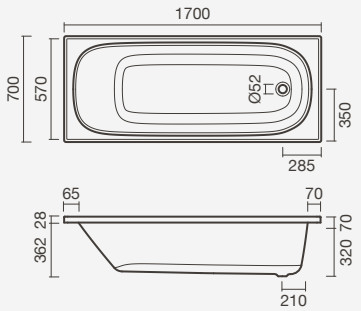

1600 x 700

Bathtubs	Reference	Weight	P.P.*	€
Bathtub				
Smooth surface	S300 0115 7000 000	24	24	•
Anti-slip surface	S300 0115 7100 000	24	24	•
Accessories				
Screw-in suppport feet > incompatible with Europa Infantil bathtub with seat				
	S300 0252 3250 700	1		•
Repair kit	SR30 0000 0000 001	1		•

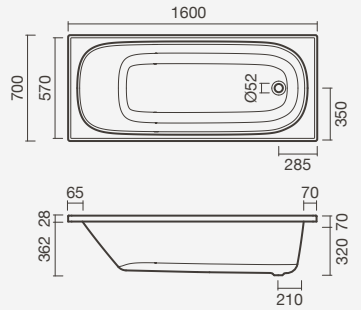

1500 x 700

Bathtubs	Reference	Weight	P.P.*	€
Bathtub				
Smooth surface	S300 0105 7000 000	23	24	•
Anti-slip surface	S300 0105 7100 000	23	24	•
Accessories				
Screw-in suppport feet > incompatible with Europa Infantil bathtub with seat				
	S300 0252 3250 700	1		•
Repair kit	SR30 0000 0000 001	1		•

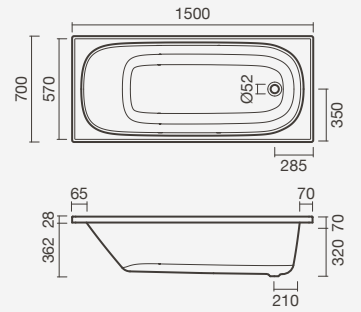

1400 x 700

Bathtubs	Reference	Weight	P.P.*	€
Bathtub				
Smooth surface	S300 0095 7000 000	21	24	•
Anti-slip surface	S300 0095 7100 000	21	24	•
Accessories				
Screw-in suppport feet > incompatible with Europa Infantil bathtub with seat				
	S300 0252 3250 700	1		•
Repair kit	SR30 0000 0000 001	1		•

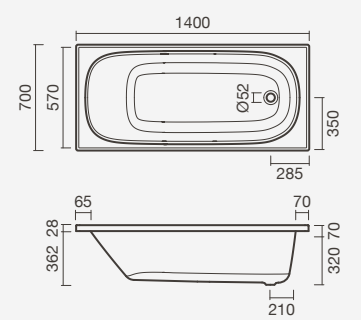

1300 x 700

Bathtubs	Reference	Weight	P.P.*	€
Bathtub				
Smooth surface	S300 0085 7000 000	19	24	•
Anti-slip surface	S300 0085 7100 000	19	24	•
Accessories				
Screw-in suppport feet > incompatible with Europa Infantil bathtub with seat				
	S300 0252 3250 700	1		•
Repair kit	SR30 0000 0000 001	1		•

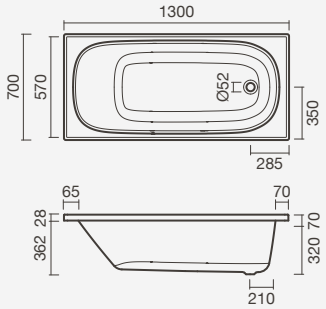

1200 x 700

Bathtubs	Reference	Weight	P.P.*	€
Bathtub				
Smooth surface	S300 0075 7000 000	17	24	•
Anti-slip surface	S300 0075 7100 000	17	24	•
Accessories				
Screw-in suppport feet > incompatible with Europa Infantil bathtub with seat				
	S300 0252 3250 700	1		•
Repair kit	SR30 0000 0000 001	1		•

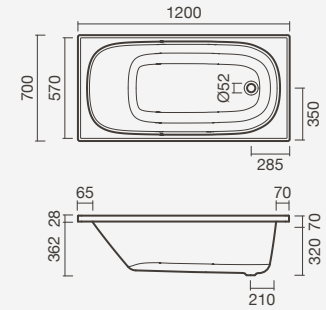

1050 x 700 - EUROPA INFANTIL

Bathtubs	Reference	Weight	P.P.*	€
Bathtub				
Anti-slip surface	S300 0175 7100 000	16	22	•
Bathtub with seat				
Smooth surface	S300 0155 7000 000	16	22	•
Accessories				
Screw-in suppport feet > incompatible with Europa Infantil bathtub with seat				
	S300 0252 3250 700	1		•
Repair kit	SR30 0000 0000 001	1		•

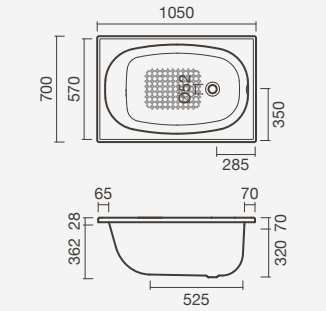

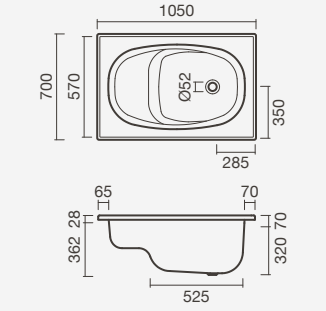







EUROPA INFANTIL enamelled steel bathtub with seat and BALANCE faucet

Quality

Because quality is the root of success, we invest significantly and continually to improve all the areas of our work: from design to after--sales service. Our efforts have resulted in the certification of our **Quality Management and Environmental Management Systems** in accordance with the **NP EN ISO 9001** and **NP EN ISO 14001** standards.

In addition to the prestige and credibility that represent the certifications awarded by APCER (Portuguese Certification Association), it is the recognition of the work that Sanitana has developed with the ultimate goal of providing the satisfaction of its customers and other interested parts.

Quality Management System

The certification of our **Quality Management System** in accordance with the **NP EN ISO 9001** standard is a clear demonstration of our commitment to quality and client satisfaction. The validation of our Quality Management System is proof that we at Sanitana base our work on ever-greater levels of demand, responsibility, organization and productivity so as to increase our competitiveness both nationally and internationally.

Portugal Does It Better

We are proud to announce that we have received the **GOLD classification** for the quality of our ceramic production. Awarded by **APICER** (the Portuguese Ceramics Industry Association), this classification seeks to reward and promote the production of ceramics in Portugal. It is a recognition of excellence on various levels - quality, environment, health and safety, energy, product certification, social responsibility, innovation, design and branding, living heritage and exports - all aspects of ceramics production, in this case sanitaryware.

CERAMICS Gold
Portugal does it better

Training

Sanitana was awarded **Training Accreditation** in 2010 by **DGERT**. This certification is a formal recognition that the company has the skill, means and resources required to develop training programmes in specific areas.

The training we provide is conducted at the highest levels of quality for both internal and external clients. We have a **portfolio of trainers** who hold **Teaching Aptitude Certificates**, allowing us to organize and promote courses in fields such as engineering, processes, health and safety, behaviour and environment for clients and employees.



Sustainability

Meeting present needs by using natural resources cannot be a compromise to meeting the needs of future generations. Business organizations play a leading role in the **Commitment to Sustainability**, which is why we have gathered the necessary conditions in order to be fully committed.

Our Environment Policy was designed bearing this panorama in mind, in line with our organization's global business policies and forward-thinking. We are committed to integrating the Environment as a tool to promote continuous improvement of our Company at all levels. Below there are some of our initiatives in this regard.

Environmental Management System

The environmental impact of industrial and economic development is an overwhelming concern for institutions and organizations all over the world. Because it is also a concern for Sanitana, we have implemented an **Environmental Management System** in line with the **NP EN ISO 14001** standard. Through this standard, it is our aim to earn the trust of our clients, employees and other interested parts, demonstrating our responsibility and commitment to the ongoing improvement of our environmental performance.

Environmental Product Statement

The Environmental Product Statement proclaims environmental performance within sanitary ceramics, SANITANA and the Group it integrates, through the implementation of scientifically measurable criteria, which are validated by entities outside of our company.
This way the consumer has access to thorough information about the environmental performance of the products they buy. The Environmental Product Statement follows the requirements of ISO 14025, which is based on the product´s life cycle when exposed to the methodology of EN 15804 and ISO 16578.

Water Label

It is estimated that in the coming years, due to population growth and ambitious development programs, the need for water resources will substantially increase. However, we know that these resources are diminishing because of global warming.
Water Label appears in this context representing the commitment of sanitary ware manufacturers, an action in which SANITANA is proud to be involved with, **to develop innovative and technologically fit solutions to reduce the consumption of water resources**. This commitment translates in our effort to provide the consumers with products that enable them to save on different levels: water, energy and money.

General Sales Conditions 2023 / 2024

All commercial relations between SANITANA – FÁBRICA DE SANITÁRIOS DE ANADIA, S.A., hereinafter referred to as SANITANA and its clients are governed by the following general sales conditions, which are considered to be accepted by the client simply by sending an order to SANITANA.

1. CATALOGUES AND ORDERS

1.1 Information given in our catalogues is only provided for guidance and is never binding. SANITANA reserves the right to change the characteristics of the products it sells at any time.

1.2 Orders are only considered valid when received in writing.

1.3 Any condition stipulated by a client in an order will only be considered if it complies with our general sales conditions or the special conditions for each product and only when such a condition is expressly accepted by SANITANA.

2. ORDER CANCELLATION OR CHANGES

2.1 Orders which have been accepted cannot be cancelled or changed in the following cases:

- When 4 days have elapsed since receipt;
- When the product has been dispatched;
- When a special manufacturing process has been started for special products, in other words, products not featured in our catalogues.

2.2 SANITANA reserves the right to cancel outstanding orders in the case of total or partial non-compliance by a client with previous contracts.

3. PRICES

3.1 The prices charged are always those on the Price List (VAT not included) which is in effect at the point the goods are dispatched.

3.2 The Price List may be changed without prior warning.

3.3 Sale prices may be changed by sending a simple notification to the client. Should the client not accept the new price, he or she may cancel the order by notifying SANITANA in writing within eight days of the notification date. After this time limit has passed, it is understood that the new conditions have been fully accepted.

3.4 Changes to the taxes imposed on the production, delivery or sale of the products do not entitle the client to cancel the order.

4. DISCOUNTS

4.1 Any discount, volume discount or credit given on the listed price shall be subject to proper compliance with the obligations giving rise to said discount.

5. DELIVERY TIMES

5.1 The delivery times stated in our acceptances of orders are merely provided as a guideline.

5.2 Non compliance with the delivery time shall not constitute reason for complaint by the client, and shall not, under any circumstances, give rise to any compensation.

5.3 Delays in delivery caused by force majeur or which are not directly attributable to SANITANA shall not constitute justifiable cause for the client to cancel the order.

6. DELIVERY

6.1 Goods are considered delivered to the client after they have been unloaded at the client's premises and receipt has been confirmed through client signature on the respective Consignment Note, or immediately after loading at SANITANA's premises onto client transport and the respective Consignment Note has been signed by the driver.

6.2 When the goods are delivered by a means of transport which is the responsibility of SANITANA, the document handed over by the transporter must be signed on receipt of the goods stating, next to the signature "Goods under reserve and subject to checking". Should the recipient not write this sentence, it is presumed that the goods have arrived correctly and no complaint will be originated. In the event that the client does express said reserve, there shall be a period of 8 (eight) days from the point of receipt of the goods in which to register any complaint. Should no communication be made to this effect, the goods are understood to have been fully accepted.

6.3 Orders may be fulfilled with partial deliveries.

6.4 Unloading of goods is the client's responsibility, should said goods have been collected by the client at SANITANA's premises.

6.5 SANITANA may refuse to transport goods whenever:

- The destination is not the client's warehouse, or that agreed in advance;
- The amount involved does not justify the transport.

7. PACKAGING

7.1 Our products shall be dispatched in the packaging as indicated on the Price List.

7.2 Except if otherwise notified, the price of our products includes packaging.

8. PAYMENT CONDITIONS

8.1 Every client shall be attributed a credit limit by our Financial Department based on commercial and financial information regarding behaviour as a commercial partner.

8.2 All invoices must be settled within the respective times, unless written agreement exists otherwise wich is accepted by both parties.
8.3 Supplies which are not paid for on time shall be subject to late payment interest in accordance with the terms set out in legislation calculated from the payment date of the respective invoice. The possible existence of outstanding situations shall in no circumstances be accepted as justification for non-timely payment of any invoice.
8.4 Supplies shall be suspended whenever there exists any situation of non-compliance by a client.
8.5 Clients who have their credit suspended shall not be supplied with any orders.
8.6 Compliance with payment times is understood to be, the date of receipt at our Financial Department, of the respective means of settlement.
8.7 If before the total or partial compliance with an order, should facts or circumstance come to light which provide grounds to believe that a client will not pay, SANITANA may suspend the delivery of products if the client does not pay in advance or guarantee the payment within the time stipulated.
8.8 These conditions enter into force immediately and cancel and replace the previous conditions. They may be changed without prior notice.

9. WARRANTY

9.1 Our products, whenever they are used and installed in accordance with our instructions, are guaranteed against manufacturing defects for a period of 3 years for products purchased after 01/01/2022 and 2 years for products purchased before 12/31/2021, except in cases in which a different guarantee time or specific conditions are stipulated in the respective products document.
9.2 In all cases, for the guarantee to take effect, the defective product must be returned and the defect must be accepted by our technical services department.
9.3 The costs of replacing products accepted under warranty will be paid by SANITANA.

10. COMPLAINTS

10.1 Complaints must be presented within 10 working days after the loading date of the order or within the period referred to in point 6.2 of the delivery conditions.
10.2 After observation by our technicians, should it be seen that the complaint has legitimate grounds, Sanitana shall only be responsible for the repair or, as a last resort, the replacement of the item with an similar product.
10.3 Should the complaint be groundless and the item is in perfect condition to be sold, clients have 10 working days to collect said item from our warehouse, after communication has been sent to this effect.

11. RETURNS

11.1 All returns of products are subject to our prior acceptance.
11.2 Authorised returns may be subject to costs relating to receipt, testing, inspection and devaluation to be agreed on a case-by-case basis with the client.
11.3 In no case shall returns be accepted of:
11.3.1 Sanitaryware of models and/or colours which are not part of the current range at that time;
11.3.2 Hydromassage bath tubs and furniture.

12. VALIDITY

12.1 These conditions apply to the products on the Price List and are valid until 31/12/2023, except if stated otherwise.
12.2 Should the conditions established above not be complied with, SANITANA reserves the right to act as it sees fit.

13. JURISDICTION

13.1 Clients and SANITANA expressly accept the jurisdiction of the Courts of Anadia, Portugal.

Sanitana Improving Simplicity

About this catalogue

All product references presented in this catalogue are now represented with spacing in between them in order to facilitate their consultation and memorization. Please note, however, that the SANITANA coding system does not include these spaces (a code represented as S100 9652 3600 000 is, in fact, the reference S10096523600000).
Set prices are obtained by adding the price of the cheaper option for each component. VAT is not included.

The products illustrated in this catalogue may not correspond exactly to the final product due to the catalogue's graphic concept and the inherent constraints of the reproduction media. For technical and/or commercial reasons, SANITANA reserves the right to make changes to prices, materials, accessories or other technical specifications contained in this catalogue without prior notice. Formats, dimensions, colours and other product characteristics should be used for guidance only. Unless otherwise indicated, all weights are represented in kilograms (kg) and measurements in millimeters (mm).

PEFC Portugal is the Portuguese Sustainable Forest Management Certification System, recognized by PEFC International, which allows Portuguese forest producers to meet internationally recognized sustainable forest management requirements.

This catalogue is produced with sustainable forest management paper, where sustainability principles based on three basic pillars are consistently applied: (1) Social (2) Environmental (3) Economic.

Sanitana, Fábrica de Sanitários de Anadia S.A.
Zona Industrial de Anadia, Apartado 45 | 3781-909 Anadia (Portugal)
E-mail: info@sanitana.com | **Tel:** +351 231 519 500 | **Fax:** +351 231 511 504

www.sanitana.com | www.sanitanaprofissional.com

Technical Assistance
Tel: +351 231 519 515 | **Fax:** +351 231 519 504
E-mail: assistencia.sanitana@sanitana.pt

S119 [05.2023]